Emerging Optical CDMA Techniques and Applications

(Invited Paper)

Jawad A. Salehi

Optical Networks Research Lab. Electrical Engineering Dept. Sharif University of Technology
Email: jasalehi@sharif.edu

Abstract- In this paper we present an in-depth review on the trends and the directions taken by the researchers worldwide in Optical Code Division Multiple Access (OCDMA) systems. We highlight those trends and features that are believed to be essential to the successful introduction of various OCDMA techniques in communication systems and data networks in near future. In particular we begin by giving a comprehensive review on the constructions of optical orthogonal codes (OOC). In our system study we first focus and discuss on various OCDMA techniques such as 1-D, 2-D and spectrally-encoded ultrashort light pulse CDMA, and discuss their pros and cons. A comprehensive discussion takes place on all important aspects of each OCDMA technique. In particular, we elaborate on enabling technologies that are needed prior to full scale consideration of OCDMA in communication systems. We extend our discussion to various data networks, including fiber-based and wireless to indicate the directions and the applications that OCDMA systems are considered for. It is believed that OCDMA once fully developed and matured will be an inseparable part of advanced optical communication systems and networks due to its various desirable features and functionalities, in not so distant future.

Keywords: Optical CDMA (OCDMA), Optical Orthogonal codes (OOC), Optical gates, spectral phase encoding, coherent and incoherent OCDMA, PPM signaling, wireless OCDMA.

I. INTRODUCTION

It was almost eighteen years ago when I was asked to write, probably, the first review paper on an obscure and a little known multiple-access technique namely Optical Code Division Multiple Access (OCDMA) [1]. I am quite pleased today that after eighteen years I find myself to have another opportunity to write a review paper on this very well known and established optical multiple access technique. This time we are not just discussing the techniques themselves, but rather the communication systems and the data networks that are envisioned to arise from these very advanced and exciting techniques. So it is fair to conclude that OCDMA techniques have finally succeeded in capturing the imaginations, the beliefs, and the trust of many communication/optical scientists, engineers, and technologists due to their immense potentials and clever encoding and decoding mechanisms that are essential for future all-optical communication systems and data networks.

The lag in recognizing the potentials of OCDMA techniques came not from the conceptual development, but rather from the enabling and advancing photonics to support the fundamental functionalities needed in developing OCDMA based communication and data systems. For me it was always the case that the conceptual developments of OCDMA techniques were far ahead of the corresponding technologies needed in optics and photonics for its support. It is not surprising; however, that this was indeed the case since the introduction of powerful all-optical CDMA techniques caught everyone within the community by surprise. The elegant solutions that were introduced were so exciting and so fundamental to light properties and optical channels that even the opponents of OCDMA were respective of it. Today, however, things are different many advance photonic devices are getting developed rapidly and significant strides on all-optical signal processing and nonlinear optics, that are at the heart of any communication and data system, have been made. In fact today it seems that the table is turned against rapid conceptual advancement and there is this fear that device advancement has a faster paste than that of the conceptual development required for their proper and efficient use in OCDMA based systems.

The legacy of OCDMA seems to follow that of wireless and mobile based CDMA communication systems which were introduced almost sixteen years ago for the first time. The success of CDMA based wireless transmission and communication systems are owed first to the maturing device integration and second to the high-level network concepts, features, and requirements. In cellular networks the features of soft-blocking and soft-hand off, with no dynamic frequency allocation required in CDMA technique were essential to increase the capacity and the number of users of bursty networks with no degradation in overall system performance.

Today reading through thousands of research papers, theoretical and experimental, on OCDMA it becomes clear that OCDMA techniques are sought after due to their abilities to support many asynchronous bursty transmission without any delay and network control, not to mention the high-level of security it may offer to casual users. And given that optical bandwidth is abundant the needed processing gain is within the realm of any optical communication system. How to use this abundant bandwidth to reduce network complexity and hence the access cost is what OCDMA is all about [2]

In this paper, we will review the developments taken for the past eighteen years in OCDMA worldwide. It is almost impossible to cover all developments in the last eighteen years due to rapid expansion and proliferation of literature

[Downloaded from mail.ijop.ir on 2026-11-26]

on OCDMA techniques and systems. Hence we focus and highlight those trends and features that we believe are essential to the successful introduction of OCDMA technique in communication systems and data networks.

This paper is organized as follows: Section II discusses advance algorithms in generating optical orthogonal codes (OOCs). We especially highlight the importance of OOCs with cross-correlation values greater that one for future incoherent OCDMA systems. Section III describes various OCDMA using OOCs. In particular we discuss advanced receiver structures introduced to date such as receivers using optical AND logic gate structures. We further elaborate on 2D OCDMA systems proposed recently by many research groups. Section IV discusses an advance OCDMA system using spectral phase encoding and decoding techniques and discusses enabling technologies that are needed to support such systems. In particular we describe various nonlinear threshold elements proposed for such systems and discuss the pros and cons. Section V focuses mainly on various OCDMA based data networks and communication systems. Various code translation, code add-drop, and OCDMA driven networking. Furthermore, we discuss interesting wireless OCDMA based local are networks and free-space atmospheric communication systems.

There is no doubt that the success of various OCDMAs depend upon the advancement of optical technology and devices and the ability to model them mathematically, in order to obtain their limits and their performance in a system. However, a more important aspect in introducing successful OCDMA techniques or any other optical communication systems is essentially to introduce signal processing techniques that are fundamental to light behaviors and properties. It would be wrong to think that one can directly mimic concepts from radio and electronic based communication systems and signal processing into optical communications and optical signal processing, since light and photonic devices could be categorically quite different from their electronic counterparts. It is essential first to understand the fundamental behaviors and characteristics of light and the optical devices to be used and then introduce signal processing techniques based upon the functionalities that are fundamental and natural to light and optics. It is for these reasons that OOCs and spectrally-encoded OCDMA techniques proved to be so successful, since they are fundamental and natural to incoherent and coherent light properties and the optical signal processing techniques that follow them.

II. ADVANCE OPTICAL ORTHOGONAL CODES ALGORITHMS

Optical orthogonal codes (OOC) defined by Salehi [4] and Chung, Salehi, and Wei [5] are family of (0,1)-sequences with desired auto- and cross-correlation properties providing asynchronous multi-access communications with easy synchronization and good performance in OCDMA communication networks [4],[6]. In this section we review few of the most important algorithms in generating OOC.

A. Mathematical Formulation

An optical orthogonal code (n, w, λ_a, λ_c) is a family C of $(0,1)$-sequences of length n with constant Hamming-weight w satisfying the following two properties: (auto-correlation property) for any codeword $\mathbf{x}=(x_0,x_1,...,x_{n-1})\in C$,the inequality $\sum_{i=0}^{n-1} x_i x_{i\oplus r}\le\lambda_a$ holds for any integer $\tau\not\equiv 0(\mathrm{mod}\,n)$, and (cross-correlation property) for any two distinct codewords $\mathbf{x},\mathbf{y}\in C$ the inequality $\sum_{i=0}^{n-1} x_i x_{i\oplus r}\le\lambda_a$ holds for any integer τ, where the notation $\oplus$ denotes the modulo-n addition [5]. When $\lambda_a=\lambda_C=\lambda$, we denote the OOC by (n,w,λ) for simplicity. The number of codewords is called the *size* of optical orthogonal code. From a practical point of view, a code with large size is required [6]. To find the best possible codes, we need to determine an upper bound on the size of an OOC with the given parameters. Let $\Phi(n,w,\lambda_a,\lambda_c)$ be the largest possible size of an $(n,w,\lambda_a,\lambda_c)-OOC$. An OOC achieving this maximum size is said to be *optimal*. It is easily shown that if $w(w-1)>\lambda_a(n-1)$ then $\Phi(n,w,\lambda_a,\lambda_c)=0$ and if $w^2>\lambda_c n$ then $\Phi(n,w,\lambda_a\lambda_c)\le 1$ [7]. Based on the Johnson bound for constant-weight error correcting codes [10], we have the following bound [5],

$$\Phi(n,w,\lambda)\le\left\lfloor\frac{1}{w}\left\lfloor\frac{n-1}{w-1}\left\lfloor\frac{n-2}{w-2}\left\lfloor\frac{n-\lambda+1}{w-\lambda+1}\left\lfloor\frac{n-\lambda}{w-\lambda}\right\rfloor\right\rfloor\right\rfloor\right\rfloor\right\rfloor \quad (1)$$

where the notation $\lfloor\ \rfloor$ denotes the integer floor function. Also, it is clear from definition that $\Phi(n,w,\lambda_a\lambda_c)\le\Phi(n,w,\lambda)$ where $\lambda=\max\{\lambda_a,\lambda_C\}$. As an example, the following two sequences are the codewords of a (13,3,1)-OOC [5].

$$C=\{1100100000000,1010000100000\} \quad (2)$$

This code is optimal since $\Phi(13,3,1)\le\left\lfloor\frac{1}{3}\left\lfloor\frac{13-1}{3-1}\right\rfloor\right\rfloor=2$.

Another useful depiction method for OOCs is the set-theoretical representation $X=\{k\in Z_n;x_k=1\}$ for each codeword $\mathbf{x}=(x_0,x_1,...,x_{n-1})$,where $Z_n=\{0,1,...,n-1\}$ denotes the modulo-n integers [5]. For example, the (40,4,1)-OOC can be represented as:

$$-OOC=\left\{\begin{matrix}\{0,1,28,37\},\{0,2,18,25\},\\ \{0,5,11,19\}\end{matrix}\right\}(\mathrm{mod}\,40) \quad (3)$$

Then the correlation properties for every codeword X and Y can be reformulated as follows.

Auto-correlation property:

$$|(a\oplus X)\cap(b\oplus X)|\le\lambda_a \quad a\ne b\ (\mathrm{mod}\,n)$$

Cross-correlation property:

$|(a\oplus X)\cap(b\oplus X)|\le\lambda_c$ where $a\oplus X$ is equal to $\{a\oplus x:x\in X\}$

[Downloaded from mail.ijop.ir on 2026-11-26]

B. Construction Methods

There are several methods for constructing OOCs that can be categorized into two cases [5], one is direct methods which use the mathematical structures such as projective geometry [5],[18], finite field theory [7],[15] and design theory [7],[11]-[12],[19], another is search methods which use the computer algorithms such as greedy and accelerated greedy algorithms [4] and outer-product matrix algorithm [20].

The first mathematical design method of OCs, presented in the original paper on OOC [5], is based on finite projective geometry. There is an $(n,w,1)$-OOC corresponding to projective geometry $PG(d,q)$ where d is a positive integer and q is a prime power such that $n=\frac{q^{d+1}-1}{q-1}$ and $w=q+1$. Each codeword corresponds to a line in $PG(d,q)$ where each line is obtained from a plane crossing the origin in a $(d+1)$ -dimensional vector space on Galois field $GF(q)$. It was shown that, [5], the number of codewords obtained from this method is equal to $\frac{q^d-1}{q^2-1}$ for even d and $\frac{q^d-q}{q^2-1}$ when is odd which achieve the Johnson bound in each two cases. Therefore, this method gives an optimal $(n,w,1)$-optical orthogonal code. For example, the set-theoretical representation of optimal (341,5,1)-OOC obtained from $PG(4,2^2)$with 17 codewords is given in the table I [5].

Table I Codewords of $(341,5,1)$ -OOC

S_1	0	1	85	21	5
S_2	0	2	170	10	42
S_3	0	3	111	104	53
S_4	0	6	222	106	208
S_5	0	9	268	151	105
S_6	0	11	45	76	198
S_7	0	12	103	75	212
S_8	0	13	305	227	43
S_9	0	15	107	146	164
S_{10}	0	17	264	203	165
S_{11}	0	19	88	267	220
S_{12}	0	22	90	55	152
S_{13}	0	23	293	252	118
S_{14}	0	24	206	83	150
S_{15}	0	25	54	169	221
S_{16}	0	26	269	86	113
S_{17}	0	37	147	217	81

Due to the Johnson bound OOCs with $\lambda=1$ have a fewer number of codewords and therefore a few number of users can be accommodated in the corresponding OCDMA networks. Hence, OOCs with $\lambda_a,\lambda_c>1$ which have more codewords and are sometimes called generalized OOC have been examined in OCDMA systems. Surprisingly, it was shown in [8], as an example, that for 50 users, the (1000,12,2)-OOC has a better performance than (1000,5,1)-OOC. This point has been deeply analyzed and verified in [9] and it was shown that OOCs with $\lambda=2,3$ could have better performance than codes with $\lambda=1$. Consequently, the construction methods of generalized OOCs have found a special importance. The first construction method of optical orthogonal codes with $\lambda=2$ is due to Chung and Kumar [7] which uses finite field theory to design an optimal $\left(P^{2m}-1,P^m+1,2\right)$-OOC with P^m-2 codewords where P is a prime number and m is a positive integer. Let α be a primitive element of $GF\left(P^{2m}\right)$ and $\beta=\alpha^{P^m+1}$, then the set-theoretical representation of codewords is as follows,

$$S_i=\left\{\log_\alpha(x);(x-1)^{P^m+1}=\beta^i\right\}, i=1,2...,P^m-2 \quad (4)$$

Table II contains the codewords of (63,9,2)-OOC obtained for $P=2$ and $m=3$ [7].

Table II Codewords of (63,9,2)-OOC

S_1	$\{1,5,8,18,28,31,35,40,59\}$
S_2	$\{2,7,10,16,17,36,55,56,62\}$
S_3	$\{3,11,24,25,27,29,30,43,51\}$
S_4	$\{4,9,14,20,32,34,47,49,61\}$
S_5	$\{6,22,23,39,48,50,54,58,60\}$
S_6	$\{12,15,33,37,44,45,46,53,57\}$

There is a strong relationship between OOCs and constant-weight Cyclically Permutable Codes or CPCs. In other words, an $(n,w,\lambda,)$-OOC is equivalent to the $(n,2w-2\lambda,w)$ -CPC which indicates an error-correcting code of length n, weight w, and minimum Hamming distance $2w-2\lambda$. Every cyclic shift of CPC codeword is also a codeword [13]. So, using construction methods of CPCs we can design new OOCs. In [13] several such methods especially for $\lambda=1$ have been examined.

OOCs with unequal auto- and cross-correlation constraints were investigated in detail by Yang and Fuja [11]. A new upper bound useful for case $\lambda_a>\lambda_c$ presented in [11] is as follows.

$$\Phi(n,w,\lambda+m,\lambda)\le\left\lfloor\frac{(\lambda+m)(n-1)(n-2)...(n-\lambda)}{w(w-1)(w-2)...(w-\lambda)}\right\rfloor \quad (5)$$

For example, from the Johnson bound for (41,4,2,1)-OOC we have $\Phi(41,4,2,1)\le\Phi(41,4,2)\le 63$ while from the above bound we have $\Phi(41,4,2,1)\le 6$, which indicates that it is impossible to have more than 6 codewords for (41,4,2,1)-OOC; so, for $\lambda_a>\lambda_c$ it is tighter than Johnson Bound.

Another useful method for OOC design is presented in [15] which uses two mathematical structures, namely, Perfect Difference Set (PDS) and finite Mobios Geometry (MG). A k-subset $D=\{d_1,d_2,...,d_k\}$ of $Z_n=\{0,1,...,n-1\}$ is called an (n,k,λ)-PDS whenever for every $a\not\equiv 0 \pmod n$ there are exactly λ ordered pairs

[Downloaded from mail.ijop.ir on 2026-11-26]

$(d_i, d_j), i \neq j$ such that $d_i - d_j \equiv a(\mathrm{mod}\, n)$.A finite Mobios geometry $MG(q,r)$ with prime power q and positive integer r is an extended Galois field $GF(q^r) \cup \{\infty\}$ with all circles on it. Based on a one-to-one correspondence between $(q^{2r}+q^r+1, q^r+1, 1)$-PDS and $MG(q,r)$, an optical orthogonal code with parameters $(q^{2r}+q^r+1, q+1, 1, 2)$ and size $2q^{r-1}\frac{q^{2r}-1}{q^2-1}$ can be obtained. As an example, if $q=2$ and $r=2$, we have a (21,3,1,2)-OOC with 20 codewords [15]. The advantage of this method is in its ability to generate large number of codewords, but the low weight requirement is a major drawback for this structure.

There are some recursive constructions for OOCs [5],[14]. One of the best recursive methods for (n,w,λ)-OOC design was obtained by Chu and Golomb [16]. This method uses γ -simple matrices over a cyclic group for recursive construction of OOCs which indicates that if there exists an (n,w,λ)-OOC with T codewords, then there exists an (nm,w,λ)-OOC with Tm^{λ} codewords whenever the prime factors of m are not less than w. As an example, for m=11 and (63,9,2)-OOC with 6 codewords, this method constructs a (693,9,2)-OOC with $6\times 11^2 = 726$ codewords [16]. One of the advantages of this method is that if the (n,w,λ)-OOC is optimal then the constructed (nm,w,λ)-OOC is at least asymptotically optimal [16].

Cyclotomic classes and numbers with respect to the finite field GF(q) are the mathematical structures that can be used to construct OOCs. Using this method, Ding and Xing presented several classes of $(2^m-1, w, 2)$-OOCs [16]. Also, five classes of (q-1,w,2)-OOCs where q is a power of odd prime have been derived using cyclotomy [17].

By using finite projective geometry, we can also design OOCs with $\lambda > 1$. In [18] based on conics on finite projective planes in the projective geometry $PG(3,q)$ an asymptotically optimal $(q^3+q^2+q+1, q+1, 2)$-OOC with q^3-q^2+q codewords have been obtained. For example, if q=3, the (40,4,2)-OOC with 21 codewords is obtained [18].

Balanced Incomplete Block Design (BIBD) is one of the most beautiful structures in discrete mathematics that have a close relation with OOCs. In other words, every (n,w,λ)-OOC is equivalent to a $(\lambda+1)-(n,w,1)$ strictly cyclic partial design [14],[19]. Since there are several methods for constructing BIBD such as Wilson and Hanani, we can use them to design OOCs. Wilson's method is applied for designing of (n,w,1)-OOC [7] and (n,w,2,1)-OOC [11]. Both cases are categorized to even w and odd w. In this method n is a prime number obtained from weight w and the size of the code. For example, the following optimal (37,5,2,1)-OOC with 3 codewords have been obtained from Wilson's method for odd w.

$$(37,5,2,1)-OOC = \{\{0,1,6,31,36\},\{0,8,11,26,29\},\{0,10,14,23,27\}\} \quad (6)$$

Hanani's method also like Wilson's is for designing of (n,w,1)-OOC [12] and (n,w,2,1)-OOC [11]. This method for constructing (n,w,1)-OOC is categorized in to two cases, namely, w=2(mod4) and $w \equiv 3(\mathrm{mod}\, 4)$. But for construction of (n,w,2,1)-OOC is divided in two cases $w \equiv 0(\mathrm{mod}\, 4)$ and $w \equiv 1(\mathrm{mod}\, 4)$. In all these cases the code length n is a prime number obtained from code weight and the number of codewords. The (41,4,2,1)-OOC with following 5 codewords are obtained from Hanani's method [11].

$$(41,4,2,1)-OOC = \begin{Bmatrix} \{1,11,30,40\},\{12,16,25,29\}, \\ \{3,4,37,38\},\{7,18,23,34\} \end{Bmatrix} \quad (7)$$

Although it seems that Hanani's method is a special case of Wilson's construction, there are some code lengths that Hanani's construction yields codes while Wilson's method does not [12].

One of the best-known cases of BIBD is Steiner Quadruple System (SQS). Based on SQS, Chu and Colbourn [19] suggested an algorithm for optimal (n,4,2)-OOC with $n \leq 44$. As an example, optimal (10,4,2)-OOC with 3 codewords obtained from this method is as follows [19]:

$$(10,4,2)-OOC = \{\{0,2,4,7\},\{0,1,3,4\},\{0,1,2,6\}\}(\mathrm{mod}\, 10) \quad (8)$$

III. OPTICAL CDMA VIA OPTICAL ORTHOGONAL CODES (INCOHERENT OCDMA)

A. *Receiver Structures for Fiber-Optic-CDMA Systems*

Figure 1 shows a typical Fiber-Optic CDMA (FO-CDMA) communication network based on a star configuration consisting of N transmitter and receiver pairs. For each user, the information data source is followed by an optical encoder that maps each bit of the output information source to a very high rate optical sequence that is then coupled into the common channel via a passive star coupler. At the receiver end of a FO-CDMA system, the received optical pulse sequence would be compared to a stored replica of itself (matched-filtering) and to a threshold level at the comparator, for the data recovery. In a CDMA communication system, multiple access interference (MAI) is recognized as the dominant source of noise which limits the system capacity. Several designs for receiver structure are proposed to be used in typical OCDMA systems using OOC in order to improve the system performance and increase the capacity by mitigating the MAI effect. In this section we discuss a few well known receiver structures developed for the past fifteen years for the single user detection schemes.

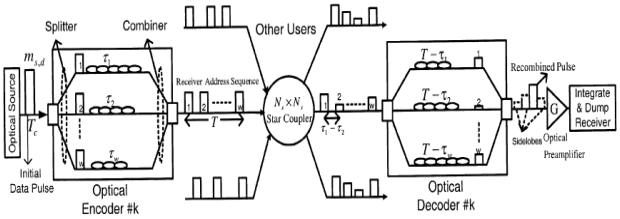

Fig. 1 A schematic diagram of an optical code division multiple-access communication system with an all-optical encoder and decoder in star configuration.

[Downloaded from mail.ijop.ir on 2026-11-26]

The simplest structure, namely, correlator receiver includes a match-filter, corresponding to its code pattern, and an integrate and dump circuit, Fig. 2. In FO-CDMA systems the match-filter can be implemented by fiber tapped-delay lines at the receiver side. In correlator receiver for the detection of OOCs was proposed and analyzed. This receiver can be realized in the same all-optical tapped delay line as the transmitter encoder. Delay lines in each branch serve to compensate for the corresponding delays induced at the encoder which constitute the corresponding OOC. The properly delayed replicas add to construct the output correlator which is then fed to the photodetector, integrate, dump, and thresholder electronic circuit. The major advantage of this system is that the limiting high-speed chip time decoding operation is done passively and optically.

If we denote the code length and the weight by *L* and *w* respectively and if each chip duration is equal to T_c, and if the positions of the pulsed mark chips corresponding to the code sequence is $c_1, c_2, \ldots,$ and c_w, the optical match-filter (passive optical tapped-delay line) consists of *w* fiber delay lines each of which make a delay equal to $(L-c_1)T_c$, $(L-c_2)T_c, \ldots,$ and $(L-c_w)T_c$ respectively. Considering one bit duration, the output of the match-filter which is the combination of all *w* lines output signal has a peak at the time LT_c if the transmitted bit is *on*. However, when the number of interfering users is equal to or greater than *w*, we may observe such a peak in the absence of the desired user signal, i.e., the transmitted bit is *off*, and this causes an error.

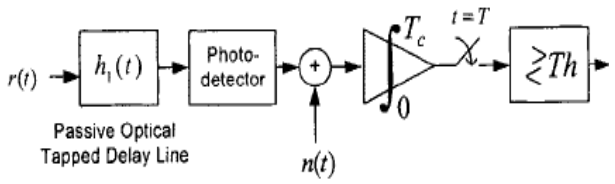

Fig. 2 Correlator receiver structure

Although the correlator receiver seems trivial, in the sense that it is optimum receiver in the case of single user communication with no interference only, it can be much improved taken into account other interfering users using some other OOC codes in the same fiber channel. In fact the first improvement was suggested by Salehi and Brackett . The authors noted that in every definite chip time just that amount of intensity transmitted for a '1' bit may carry information and any excess intensity is due to interference. Such an interfering term may cause a '0' data bit to be falsely decoded as '1'. Thus an optical hard-limiter, which limits such excessive amount of intensity, if placed before the conventional correlator receiver will block some interfering patterns in causing errors and improve the system performance. So they suggested employing an optical hard-limiter to suppress some interference patterns that are capable of producing errors and showed the improvement in system performance due to multi-user interference.

Performance improvement produced by correlator + optical hard-limiter was not satisfactory. Kwon [21] showed that optical hard-limiter in a system using avalanche photodiode (APD) only slightly improves the system performance. Later Ohtsuki [22],[23]showed that adding another optical hard-limiter this time after optical correlator with a proper threshold setting for the second hard-limiter, results in a much better performance. In fact, such configuration removes some interference pattern which could not be removed by the first hard-limiter. As a serious drawback for receivers incorporating optical hard-limiter, such devices though mathematically straightforward are rather practically far from being matured and practical. They suffer from a non-ideal transition range and show hysteresis. For this reason Shalaby introduced the concept of chip-level detection in OCDMA systems [24]. In this structure decision is based upon each pulsed mark chip received power constituting the desired OOC instead of their combined power values as in the correlator receiver. In this structure received power of each pulsed mark chip is compared with an optimum threshold. Bit '1' is decided if all *w* pulsed chips power are greater than the optimum threshold otherwise '0' is decided. The results show a significant improvement in chip-level detection when compared to a simple correlator especially when the number of interfering users increases.

There have been many efforts for obtaining optimum receiver structure in the area of direct detection OCDMA systems. But the mathematical development for the case of optimum receiver is not so promising since computational complexity prohibits any practical realization of such systems [25]-[26].

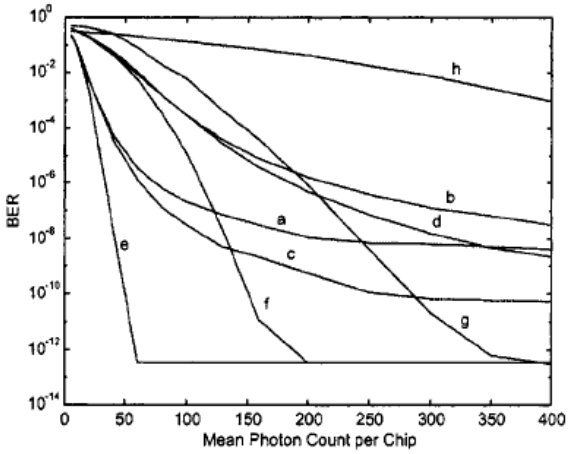

Fig. 3 Dependence of BER on mean photon count per chip for (a) passive correlator structure (b) active correlator structure (c) hardlimiter+ passive correlator structure (d) hardlimiter+ active correlator structure (e) double optical hardlimiter+ passive correlator structure (f) double optical hardlimiter+ active correlator structure (g) high-speed chip-level detector (h) optical chip-level detector

The correlator receiver in is analyzed under interference-limited assumption, while the more general analysis must take into account Poisson shot noise and photo detector dark current noise [27]. Both [25] and [26] consider shot noise and dark current in the context of photon counting statistics framework and finally [21] assumes a Gaussian statistics for the output signal of photodetector incorporating all major sources of noise, a Gaussian approximation is a rather good approximation for APD photodetector but not so good for conventional PIN diode

[Downloaded from mail.ijop.ir on 2026-11-26]

detector especially when the design is for low energy per bit systems.

Since thermal electronic noise is the dominant noise in many practical optical communication systems, there have been an actual demand for a general performance evaluation framework which not only considers Poisson distributed shot noise and dark current noise but it also includes Gaussian distributed thermal noise along with multi-user interference signal. Zahedi and Salehi in [28] presented a unified model based on photon counting technique which included practically all the above mentioned sources of noise. With this approach general expressions for bit error rate for various receiver structures in FO-CDMA were obtained using meticulous and exact mathematical models. This work compares various receiver structures in a rather realistic condition and highlights that correlator + double optical hard-limiter outperforms the chip-level detector when the transmitted energy per bit is low. As the power increases they both converge to the optimum single-user receiver as was shown by Shalaby [24]. On the other hand, chip-level detector causes a significant improvement as compared to conventional correlator in medium to high power region, and addition of a single optical hard-limiter prior to chip-level detection does not improve much the system performance.

Zahedi and Salehi differentiated between passive tapped delay line correlator and active correlator. It is assumed that for the passive tapped delay line correlator the electronic circuit necessary is designed to perform a short-term integration (over a chip-time), and for active correlator is the integration is on the whole bit period hence a much slower integrator. Results of this research show that, though requiring faster electronics, passive correlator performs better in the thermal noise limited region. It is plausible because chip time integration means gathering less circuit noise than bit time integration. Fig. 3 presents the performance of different passive and active structures of the studied receivers by showing the dependence of BER on the mean number of photons per chip.

Finally in [29] Shalaby claims that while the correlator + double optical hard-limiter has a slight advantage over chip-level detection scheme however the former turns out to be impractical from hardware complexity point of view.

B. Optical AND Logic Gate Based Receiver with Generalized OOC

Considering the mutual interference among multiple users the most desirable on-off signature sequences are OOCs with auto and cross correlation values equal to one ($\lambda = 1$). However these families of codes may suffer from low cardinality in certain applications. Furthermore in [27] Azizoglu, Salehi and Li showed that for the same number of users and the same code weight, the performance of OOCs with $\lambda = 2$ may improve on the performance of strict OOCs ($\lambda = 1$). This is because in the former case the code weight can be larger than strict OOCs and this can compensate for the effect of multi-user interference. Furthermore with $\lambda = 2$ OOC set have a cardinality as high as a hundred to a thousand times bigger than strict OOCs. Also in [29] it was shown that using OOCs with $\lambda = 2$ the throughput capacity of the system increases considerably for both correlation and chip-level receivers. Chen and Yang in [30] by applying the Markov chain model obtained the exact expressions for the bit-error probability for arbitrary λ with hard-limiting receiver for prime sequences.

Mashhadi and Salehi obtained a simple solution on the performance of OCDMA systems with optical AND logic gate as the receiver structure, Fig. 4, using generalized OOCs, i.e., arbitrary λ. They obtained the best codes for different design scenarios in an OCDMA system [31]. Furthermore, they showed that for most practical purposes OOCs with $1 \le \lambda \le 3$ achieve the best performance and they found the corresponding optimum weight that meet the best performance.

The most important result deduced from the exact solution is a set of empirical formulas that interrelate five important parameters, namely, minimum error rate, $P_{e,\min}$, minimum code length required, $L_{\min}$, maximum number of users, $N_{\max}$, optimum weight, w_{opt} and optimum cross-correlation value λ_{opt}. From the solution and numerical results, it was shown that, OOCs with $\lambda = 2,3$ are more desirable than OOCs with $\lambda = 1$, thereby giving a strong hint into the importance of constructing and generating OOCs with $\lambda = 2,3$.

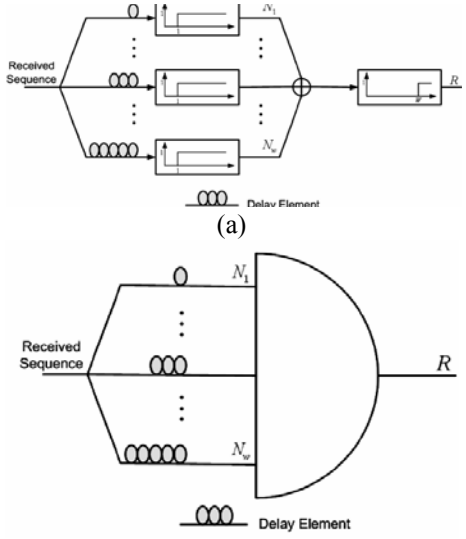

Fig. 4 (a) Ideal optical AND logic gate receiver structure for all-optical code recognition. (b) Equivalent functional AND logic gate receiver structure.

Finally we describe a technique introduced by Forouzan, Salehi, Nasiri-Kenari namely Frame Time Hopping Optical CDMA (FTH-OCDMA) in which the orthogonality between code sequences is more relaxed [32]. The FTH-OCDMA transmission method is an extension of a recently proposed technique based on ultrawide-bandwidth radio communication scheme [33]. In this method each bit duration is divided into w frames each of which has a pulsed mark chip. The position of the pulsed mark chip of each frame is arbitrary. Thus if we denote the number of chips per bit by L, then the number of possible code sequences can be as high as $(L/w)^w$. This large cardinality

[Downloaded from mail.ijop.ir on 2026-11-26]

makes this method interesting for certain applications. For instance, since the search space of FTH code sequences is very large this method is suitable for secure transmission of data in the physical layer. However since the cross-correlation coefficient of each two codes in FTH is not bounded by an integer number smaller than *w*, on average we can say that the performance of FTH-OCDMA is always worse than OCDMA system using generalized OOC, with $1 \le \lambda < w$, for the same number of users and the same code weight.

C. Advanced Block-Coded PPM Signaling for Optical CDMA

With the advent of fiber-optic CDMA technology, a large body of research work has been carried out around finding powerful code structures and effective signalings that can enhance such system's capacity and performance. Among the possible signalings for an optical communication system, on-off keying (OOK) has been studied more than other signalings due to its simple operation and ease of analysis.

In OOK information bit '1' is transmitted by an *on* optical pulse and information bit '0' is transmitted by an *off* pulse. So in optical systems, using OOK as the signaling format, receiver must obtain an optimum threshold to decide on the transmitted information bit. In many conditions it is shown that probability of error strongly depends on the threshold value and threshold strongly varies with variations in input photons and environmental parameters. This implies that, if receiver has no accurate information on the variation of system noise, the probability of error obtained is erroneous.

On the other hand Pulse Position Modulation (PPM) signaling is an alternative to OOK in many optical communications systems. In PPM signaling format each symbol is represented by the position of the optical pulse among *M* possible time slots. If the time slots are disjoint we call this type of PPM as *M*-ary PPM signaling (Fig. 5). One can check easily that if the available bandwidth of the system is constant, the throughput offered by *M*-ary PPM is less than the OOK by a factor of $\log M / M$. On the other hand it is shown that *M*-ary PPM is much more energy efficient than the OOK signaling.

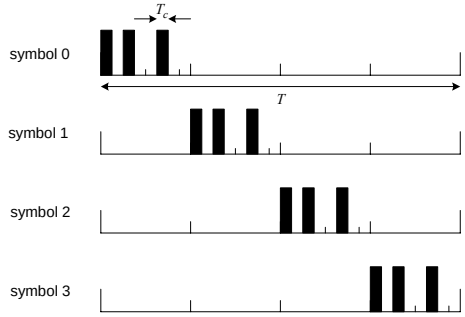

Fig. 5 An example of the transmitted signal formats of a single user in a PPM-CDMA system with $M = 4$, $L = 8$, and $w = 3$.

However, performance analysis of *M*-ary PPM for OCDMA systems has been the subject of interest [34],[35],[36] In the most standard form of optical PPM-CDMA systems, each user produces equi-probable *M*-ary data symbols. Each symbol modulates the position of a laser pulse with a temporal width which is equal to $1/M$ of the whole symbol duration. The modulated laser pulse is then spread within the time slot to generate the optical PPM-CDMA pulse sequence. In other word, each user's symbol interval is divided into *M* slots where each slot contains the corresponding spreading code. To send the *m*th symbol the spreading code of the corresponding user is placed in the *m*th time slot and the other time slots remain *off*. Therefore for PPM signaling, optimum receiver is just a comparator between *M* received signal photons from *M* separate time slots and consequently no need to compute an optimum threshold which results in simplifying the receiver structure.

It has been shown that for an *M*-ary PPM optical communication system the more the signaling multiplicative parameter, i.e., *M*, the less the system throughput. On the other hand in a typical *M*-ary PPM OCDMA system multiple-access interference (MAI) is reduced by increasing signaling multiplicative parameter *M*. So there is a trade-off between the spectral inefficiency and MAI reduction that will determine the proper value of the multiplicative parameter of the signaling.

However it can be shown that when we deal with generalized OOC ($\lambda \ge 1$) as the signature sequence in *M*-ary PPM signaling, system throughput outperforms the OOK-OCDMA systems. As a result in this method we not only have the desired feature of *M*-ary PPM, i.e., energy efficiency, but also mitigate bandwidth inefficiency considerably.

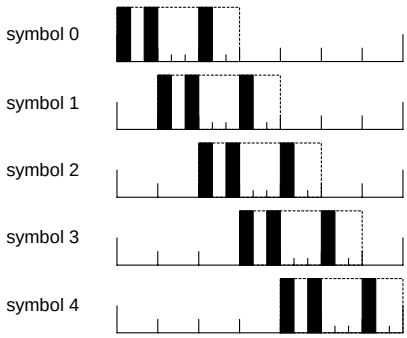

Fig. 6 An example of the transmitted signal formats of single user in an OPPM-CDMA system with M = 5, L = 9, and w = 3.

To improve the throughput efficiency of *M*-ary pulse position modulation, overlapping PPM (OPPM) is an interesting alternative. In this method the positions of different symbols are not necessarily disjoint as is shown in Fig. 6. This type of signaling can be considered as a generalization to PPM where overlapping is allowed between pulse positions. OPPM retains some advantages of *M*-ary PPM such as simplicity of implementation as well as it improves system's throughput without a need to decrease the pulse width. In [37],[38] Shalaby suggests employing OPPM in OCDMA systems and show that this signaling improves performance and throughput of the system when compared to OOK and *M*-ary PPM signaling. Although when the overlapping index increases the need for accurate synchronization will be more critical.

D. Optical CDMA

In general, code-division multiple-access is relatively poor in terms of spectral efficiency resulting in low throughputs.

[Downloaded from mail.ijop.ir on 2026-11-26]

It is shown that using two-dimensional (2-D) optical CDMA can improve the overall network throughput. Vannucci in [39] proposed a hybrid scheme to combine WDM and CDMA in such a way that the beneficial aspects of each technique mitigate the shortcoming of the other. It was shown that using different wavelength improves spectral efficiency of OCDMA and using OCDMA greatly release frequency control requirements. In [40], Tancevski and Andonovic, a 2-D time spreading integrated with wavelength hopping pattern was proposed. By using prime codes in, both, time and wavelength dimensions the author show that the constructed codes have auto-correlation function with zero sidelobes and a cross-correlation of at most one, and thus improve the orthogonality condition when compared to 1-D prime sequences. In [41], Yang and Kwong did an in-depth analysis in order to obtain the performance of a hybrid WDMA + CDMA and some constructions algorithms where presented for 2-D codes or multiwavelength CDMA scheme, and the authors showed that multiwavelength CDMA outperforms the hybrid scheme under some conditions.

In general a family of 2-D OOC code can be represented by five important parameters $(N \times M, w, \lambda_a, \lambda_c)$ where N is the code length in time domain, M is the number of available wavelengths, w represents code weight, λ_a and λ_c correspond to auto- and cross-correlation values, respectively (Fig. 7). The above 2-D family of OOC codes increases the cardinality without requiring to reduce user's data rate, but at the expense of increased transmitter and receiver complexity. As in typical time-spreading (1-D) incoherent OCDMA systems, each user's data stream is encoded by it's corresponding 2-D codes. The only difference being that in 2-D coding scheme, each marked or pulsed chip is transmitted via a different wavelength or center frequency. These wavelengths are chosen from a set of available wavelengths and the process of wavelength selection depends explicitly on the particular code structure, which itself depends on the correlation constraints of the 2-D code family in use.

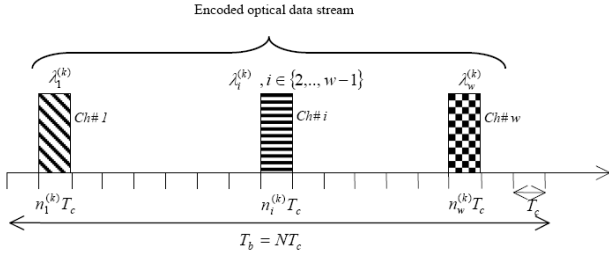

Fig. 7 Encoded pulses of 2-D optical CDMA system

In [42] Fathallah, Rusch, LaRochell suggest using Fiber Bragg grating to implement a 2-D fast frequency hopped (FFH) OCDMA scheme on an all-optical platform achieving very high bit-rates. They show that their proposed scheme offers a large number of simultaneous users' codes with low crosstalk and it outperforms 1-D OCDMA for a given code length using a correlator receiver.

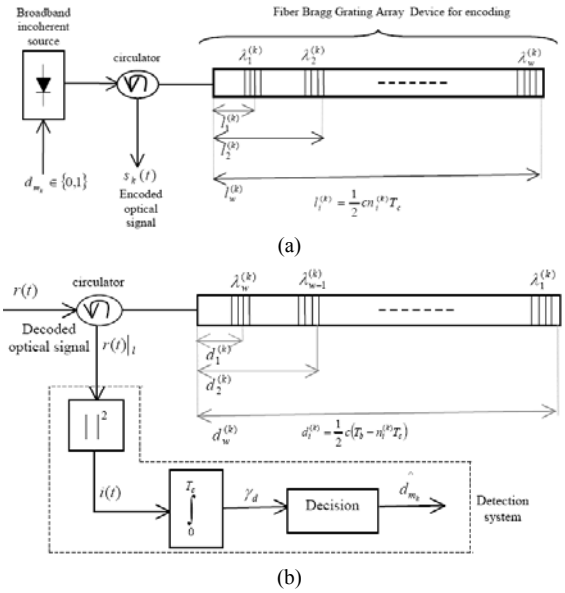

Fig. 8 (a) Encoding and (b) decoding structure based on FBG arrays.

In schemes using FBG arrays a broadband optical signal from an incoherent optical source is incident upon the FBG array devices. Thus the power spectrum of the transmitted signals for marked or pulsed chips, depend on both the spectrum of the broadband light and field domain impulse response of the FBG array device, Fig. 8.

Many other published works specially by research groups at USC under Willner, Laval University under Rusch, Princeton and Hofstra Universities under Prucnal and Kwong in relation with constructing 2-D code matrices and evaluating the system performance can be found in the literature [43]-[47] Also examples of three-dimensional (3-D) codes are given in [48] by Mendez, Finnila, Gagliardi, using wavelength, space and time for defining the codes, or using wavelength, polarization, and time for the same purpose [49],[50]

IV. COHERENT SPECTRALLY-ENCODED ULTRASHORT LIGHT PULSE OPTICAL CDMA

Coding in OCDMA techniques incorporating coherent ultrashort light pulses can be either in frequency domain or time domain. In both schemes the result of the encoding is a pseudorandom light burst whose autocorrelation is a peaked ultrashort pulse and its cross-correlation with waveforms generated with different codes remain a low intensity noise-like signal. In the following we first briefly describe the main representative technique of each scheme along with different approaches that have been used to implement the related en/decoder. Then, the most contentious part of the receiver, i.e., the optical thresholder (or the ultrashort pulse detector), is discussed and methods that have so far been used for its realization are reviewed.

A. Spectral Phase Encoding OCDMA

In this technique which was first introduced by Salehi, Weiner, Heritage, the pseudorandom code assigned to each user is applied directly to the spectrum of the light pulse in the transmitter. The 4F arrangement in Fig. 9 which was first used to implement the technique best illustrates the main idea [51]. The first grating spatially decomposes the

[Downloaded from mail.ijop.ir on 2026-11-26]

spectral components of the incident light pulse (which represents a binary '1') and then they are mapped to the focal plane of the first lens, where they pass through a mask that modifies their phase according to a pseudorandom code. The modified spectrum is then collapsed by the second lens and the second grating back into a single optical beam. As a result of the spectrum slicing induced by the phase mask, the pulse spreads in time and becomes a low intensity pseudonoise light burst [51].

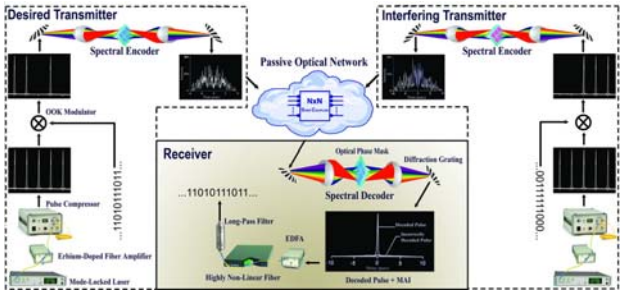

Fig. 9 Proposed scheme for optical CDMA based on spectral encoding and decoding of ultrashort light pulses.

A receiver of this technique consists of a decoder and an optical threshold device. The optical decoder is similar to the optical encoder except that its phase mask is the complex conjugate of the encoding mask. Thus a pulse is properly decoded when the encoding and decoding masks are a complex conjugate pair. In this case the spectral phase shifts are removed and the original coherent ultrashort light pulse is reconstructed. On the other hand, when the encoding and decoding masks do not match, the spectral phase shifts are rearranged but not removed, and the pulse at the output of the decoder remains a low intensity pseudo-noise burst. The threshold device is set to detect data corresponding to intense, properly decoded pulses and to reject low intensity, improperly decoded, pseudo-noise bursts.

1) Enabling Technologies for Spectral Phase Encoder/Decoder

Besides the above 4F (diffraction) grating pair set-up which uses large free-space bulk-optics and also suffers from inadequate resolution for long code lengths, some other methods have been proposed for the implementation of spectral phase en/decoder. In the following we describe these methods and the related experimental results.

VIPA- A new structure called virtually imaged phased array (VIPA) [52], was adopted to replace the grating part of the conventional 4F structure to increase its spectral resolution by Etemad *et al.* [53]. VIPA is essentially an optical disperser and consists of a collimator, a glass plate and a set of focusing lenses. The glass plate is coated in one side perfectly reflective and in another side partially transmitive and has a small angle with respect to optical axis. The optical collimated beam enters the plate from an uncoated window and gets trapped between the two opposite sides of the plate. In each roundtrip some ratio of beam escapes. Each escaped beam seems to be originated from a virtual independent point source with some phase delay, giving the apparatus its name. By getting far from the plate, these escaped phase-delayed beams interfere and by virtue of the well known concept behind gratings, spectral content of optical beam gets dispersed. Focusing lenses serve to translate angular dispersion to spatial resolution. In an OCDMA experiment using VIPA [53], a spectral phase coding with a resolution of ~1GHz was achieved, Fig. 10.

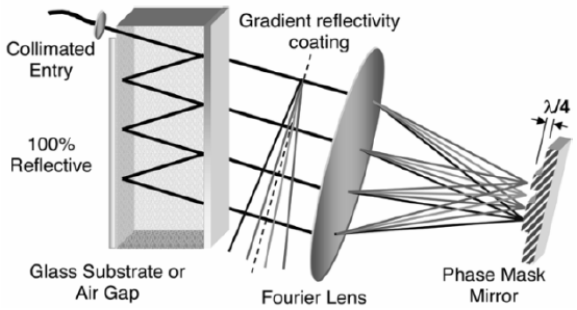

Fig. 10 Virtually Imaged Phased Array (VIPA) setup

More compact solutions using other kinds of gratings such as fiber Bragg gratings (FBG) and array waveguide gratings (AWG) were proposed in [54] and [55] by Granet-Jepsen *et al.* and Tsuda *et al.* respectively.

FBG- The all-fiber spectral en/decoder based on FBG consists of a pair of step-chirped FBGs, i.e., gratings composed of spatially adjacent sub-gratings each of constant but constantly incremented spatial period–arranged in series and is based on the concept of spectral dispersion in time domain as opposed to the spatial Fourier domain [54]. When an input pulse is incident on the first chirped grating, the wavelengths are dispersed in time and the reflected pulse is temporally expanded. When this expanded bit is reflected from a second FBG having an opposite dispersion slope, the wavelength components are resynchronized and the original pulse is reconstituted. However, if the second grating contains phase shifts along its length these phase shifts are transferred to the reflected signal and the output pulse represents a spectral phase encoded bit. The decoder is identical to the encoder, but with the gratings connected in reverse. In the experiment reported in [54] each gratings consists of 8 sub-gratings (a spectral code with length 8). Each sub-grating is of length 2.4 nm and has a reflectivity of 60% and their Bragg wavelengths increase in 0.5 nm steps from 1540.5 nm.

AWG- A promising approach to spectral phase en/decoder which provides high spectral resolution along with the possibility of monolithic integration, is based on AWGs[55]-[57] The operation of these methods is similar to the 4F system described in the above, i.e., a grating first spatially decomposes spectral content of the incoming light pulse, and after inserting appropriate phase shifts by a phase mask, a second grating (or in the case of a reflection type, the first grating itself) reassembles the original decomposed spectral content. In the experiment presented by Tsuda *et al.* [55] a reflection type AWG with a diffraction order of 72 and with an array of 286 waveguides was used. The resulted resolution was 12.6 GHz. A pseudo random sequence with a length of 255 was used in the fabrication of the spatial phase filter by electron beam lithography. This was a single user experiment in which a mode-locked laser with a pulse width of 810 fs was used. In a recent and appealing experiment an AWG–based en/decoder with an electro-optic phase shifter array

[Downloaded from mail.ijop.ir on 2026-11-26]

and which is totally monolithically integrated is constructed and reported by a research team at the university of California at Davis [56]-[57] The number of AWG channels in this experiment is relatively low (8 channels), but there seems to be no severe restrictions to move to more channels. The fast response of electro-optic phase shifter (more than 10 GHz) is an important feature of this approach. None of the other reported methods could dynamically change the spectral phase mask with this ease and speed.

Finally, recently another method using reconfigurable integrated ring resonator circuits was introduced by Agrawal *et al.* [58]. In this approach the ultrashort light pulse is passed through a filter bank based on micro-ring resonators and after appropriate phase shifts by thermo-optic phase heaters, the outputs of different branches are combined together. The code length reported here was 8. This technique also provides an integrated en/decoder, but the phase shift speed cannot be larger than a few kilohertz.

B. Coherent Time-Addressing OCDMA

This technique is essentially the DS-CDMA used in radio wireless communications. For each data bit to be transmitted, a pulse train in which the polarity of pulses is determined by a pseudo random (PN) sequence (e.g., M-sequence or Gold codes) is transmitted [59]-[61] The desired receiver uses a simple match-filter to recover the data bits. Other users who use different PN codes only produce a low intensity noise at the match-filter output.

Planar lightwave circuit (PLC) technology was used in [59] to implement the encoder and decoder by monolithically integrating the required tunable delay lines, phase shifters, and combiners onto a single substrate. However because of the limitations on the code length in this technique, it seems to become obsolete. A more efficient approach using super structure fiber bragg gratings (SSFBG)– that is, an FBG with a slowly varying refractive-index modulation profile imposed along its length– was adopted by Teh *et al.* in [60]. When an ultrashort pulse is reflected from an SSFBG, it is transformed into a pulse with a temporal shape given by the convolution between the input pulse and the impulse response of the grating. The impulse response of a grating has a temporal profile given by the complex form of the refractive index superstructure modulation profile of the grating. If phase shifts are inserted between different segments of SSFBG, an incident ultrashort optical pulse onto the SSFBG will generate a series of coherent short optical pulses whose phases are determined by the pattern of the phase shifts in the SSFBG. Using this technique, code lengths up to 511 could be achieved as reported by Hamanaka *et al.* [61].

C. Ultrashort Light Pulse Detectors

The receiver of each user in an ultrashort light pulse OCDMA system requires a thresholding device that is able to distinguish between the properly decoded pulses (uncoded pulses) and the multiple-access interference (MAI) noise. MAI signal consists of the summation of multiple improperly decoded pulses (coded pulses). Uncoded pulses have high peak power and short time duration. But, on the other hand coded pulses have low peak power and long duration. Fig. 11 shows the block diagram of a typical spectrally-encoded OCDMA network with M users, in which, specifically, different structures of nonlinear receivers can be used for detection purposes. In this section we intend to introduce these structures which are considered frequently in literatures as nonlinear thresholders. At the receiver, the output signal of the decoder corresponding to the *i*'th user can be expressed as follows,

$$r_i(t) = \sqrt{GE_{ij}(t) + \sqrt{G}} \sum_{j=1, j\neq i}^{M} E_{ij}(t) + Q(t) \qquad (11)$$

In the above equation G, the gain, is the total amplification and losses along the transmission line. $Q(t)$ is the amplification noise present at the receiver. E_i (t) is the coded signal corresponding to the encoder of the *i*'th user, $E_{ii}(t)$ is the properly decoded pulse at the decoder of the *i*th user, and $\sum_{j=,j\neq i}^{M} E_{ij}(t)$ is the improperly decoded signal (MAI noise) due to all other users in the network.

Results of reference [51], indicates that if random codes are used at the encoder and decoder, MAI noise can be modeled as a Gaussian random process. And it is well known that the amplifier noise in eq. (11) can also be represented with a Gaussian random process. Therefore, the optimum receiver for the detection of properly decoded pulse, corrupted with MAI and amplifier noise, is a filter matched to the original uncoded light pulse. But because of the limited speed of ordinary photodiodes, implementation of the match-filter is not practical. In fact, coded and uncoded pulses have equal energy in one bit duration. Therefore, an ordinary photodiode, bandwidth limited to the bit-rate, can not distinguish between the properly decoded pulse and MAI signal.

As shown in Fig. 11, a nonlinear optical thresholder is needed to distinguish between the coded and properly decoded signals. When the input to the thresholder is MAI signal, with low peak power, the output should be negligible compared to the output for the properly decoded pulse. Some research groups proposed the time gating method to reduce MAI noise, see Etemad *et al.* and Wada *et al*[53],[62]. This method requires a control pulse at the receiver which needs to be synchronized to the properly decoded short pulse to select the main lobe of that pulse and to reject the out of main lobe's interferences. Therefore, a fine level of time coordination is required in the receiver. But as it is known, asynchronous operation is one of the desired features of OCDMA technique which is sacrificed in this method for the sake of interference reduction. To overcome this issue other types of asynchronous thresholders are introduced. Some other research groups proposed the use of slot-level synchronous CDMA technique for interference and beat noise reduction [63],[81]In this method the bit duration is divided into some time slots. The users are classified into some groups and each time slot is dedicated to a group. The users in one group transmit their signals into that time slot that is assigned to them. After encoding, the short light pulse of each user spreads in time in its dedicated time slot and does not overlap with the other group users' signals. At the receiver of each user first the corresponding time slot should be gated with some time gating methods [63]. Therefore, similar to the chip level time gating scheme this

[Downloaded from mail.ijop.ir on 2026-11-26]

method also requires precise timing coordination between the users which sacrifices asynchronous operation of OCDMA systems. In reference [63] by Scot *et al.* after slot level time gating a highly non-linear fiber (HNLF) thresholder which is discussed later in this paper is used for interference reduction within that time slot. In this reference an OCDMA system with eight users is demonstrated. In that demonstration the bit duration is divided into two time slots and each time slot accommodates four users' signals only.

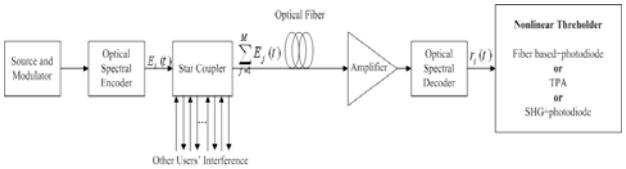

Fig. 11 The block diagram of a typical spectrally encoded optical CDMA network which uses different types of thresholders for detection

A block diagram of a typical spectrally encoded optical CDMA network which uses different types of thresholders for detection

However there are a few different asynchronous methods for detection purposes. To the best of our knowledge three major types of asynchronous thresholders are addressed in the literature up to now. These methods do not require control signal among the users and perform completely in an asynchronous manner.

1) Enabling Technologies for Detection of Ultrashort Pulses

Fiber Based Thresholders-This type of thresholder works based on nonlinear properties of fibers when a high intensity short pulse propagates within the fiber. When an uncoded pulse or a properly decoded pulse with a high peak power propagates along the fiber, due to self phase modulation (SPM) and other nonlinear effects such as Raman effects, an intensity dependent phase is generated and accumulated to the phase of the main pulse. This effect causes frequency spectrum broadening with the propagation of uncoded ultra-short pulses. But, if low intensity MAI propagates along the fiber, the frequency spectrum does not broaden.

Within the conventional model of SPM, the nonlinear properties of the medium are governed by the nonlinear Schrödinger equation as follows [64]

$$j\frac{\partial A}{\partial z} = -j\frac{\alpha}{2}A + \beta_2\frac{\partial^2 A}{\partial T^2} - \gamma|A|^2 A \tag{12}$$

In the above equation, $A(z,t)$ is the slowly varying envelope amplitude and, α, β_2 and γ represent the loss coefficient, the group velocity dispersion (GVD) coefficient and the nonlinear coefficient of the fiber, respectively. Considering only nonlinear effects of fiber and ignoring the loss and the dispersion, there is a closed form solution for the above equation as follows [64]

$$A(L,t) = A(0,t)\exp\left[j\gamma L|A(0,t)|^2\right] \tag{13}$$

A band-pass filter (BPF), having it's transmission band out of the signal frequency band allows passing the new frequency components generated by self phase modulation effect and rejects the original signal frequency components. Finally, a photodiode with a bandwidth limited to the incoming bit-rate gathers the energy in one bit duration. This energy only corresponds to the output of the BPF in one bit duration. It has a relatively large value when an uncoded or properly decoded pulse propagates when compared to noise like coded pulse propagating inside the fiber. The expressed effect is one of the simplest forms of fiber nonlinearities in which the dispersion effect of fiber is not considered. Considering dispersion, equation (13) does not apply exactly, however as before the spectrum broadening of the propagated pulse occurs if a high peak power pulse propagates along the fiber, and a band pass filter following the nonlinear fiber works as a nonlinear thresholder.

This technique has been applied in different forms by different research groups such as, Dispersion Shifted Fiber (DSF) [65], Highly Non-Linear Fiber (HNLF) [66], Holy Fiber (HF) [67], and Super Continuum (SC) generation in (Dispersion Flattened Fiber (DFF) [61],[68] All the above fibers use SPM induced spectral broadening followed by a band pass filter.

Two Photon Absorption (TPA)- In photodetectors using TPA process, the band gap frequency of the photodetector is chosen to be between the values of once and twice the frequency of the transmitted light [72]. Thus an electron-hole pair will be liberated from a photodetector if two photons are incident on the photodetector simultaneously [73]. In a TPA detector the rate of photoelectrons generated in a photodetector (dN/dt) is proportional to the square of the intensity of the optical signal. Hence, we have [73]:

$$\frac{dN}{dt} = \frac{\alpha}{h\nu}I(t) + \frac{\gamma}{2h\nu}I^2(t) \tag{14}$$

In the above equation $I(t)$ is the intensity of incident wave, α and γ are physical constants, h is the Planck's constant and ν is the frequency of incident wave. Therefore, the TPA induced photocurrent is directly proportional to the square of the average input optical power and inversely proportional to the pulse-width of the incident optical field [74]. In [74] the responses of TPA photodetector to both of pulse average power and pulse width have been experimentally validated.

Since properly decoded and improperly decoded pulses have different pulse widths, a TPA photodetector can be used as a thresholder in the receiver. Some research groups, such as Purdue, proposed this device as a thresholder for spectrally encoded ultrashort light pulse OCDMA systems [75]. In a TPA based thresholder if we use purely random codes with fixed average power the contrast ratio is proportional to 1/N in which N is the code length [75]. In reference [75] they have used GaAs/AlGaAs ridge P-I-N waveguide detector as a TPA photodetector. Also by using M-sequences as the signature sequences with length 63 and with an average power of 4.7mW they could obtain a contrast ratio approximately equal to 12dB. One of the major advantages of TPA based thresholders is their compactness. This feature also causes that these devices have a lower latency in response to input signal compare to fiber based thresholders whose length is hundreds of meters and have large response time.

Second Harmonic Generation (SHG)- When an optical wave of frequency ω_0 propagates in a dielectric material a

[Downloaded from mail.ijop.ir on 2026-11-26]

second harmonic wave of frequency $2\omega_0$ is generated and traversed to the end of the material. This phenomenon is occurred efficiently, if the phase velocity of the fundamental and the second harmonic waves are matched. As we know, coded and uncoded pulses have broad frequency spectrum and it is not possible to satisfy the phase-matching condition for all sum frequency components. In reference [78] propagation of broad band pulses in a dielectric material considering SHG is addressed. When a broad band pulse with frequency spectrum $A_1(\omega)$ propagates in the SHG dielectric material (assuming phase matching conditions are satisfied), a second harmonic wave with frequency spectrum $A_2(\omega)$ is generated as follows, [79]

$$A_2(\omega)=\left[2\int_0^{\infty}A_1(\omega/2-\omega')A_1(\omega/2+\omega')d\omega'\right]D(\omega) \qquad (18)$$

In the above equation ω and ώ are the frequency detuning from $2\omega_0$ and ω_0 respectively (ω_0 is the carrier frequency of the fundamental wave and $2\omega_0$ is the carrier frequency of second harmonic pulse). D(ω) is the transfer function of a low pass filter, which represents the effect of phase matching condition and is expressed as follows, [79]

$$D(\omega)=\Gamma L\sin c(\omega\alpha L/2) \qquad (19)$$

In the above equation L and Γ are the length and nonlinear coupling coefficient of dielectric material respectively and $\alpha=1/v_{g1}-1/v_{g2}$ is produced from the group velocity mismatch (GVM) between the fundamental pulse, with group velocity v_{g1}, and the second harmonic pulse with group velocity v_{g1}.

Based on the relative value of the length of SHG material (crystal), two extreme cases could be considered namely thin crystal and thick crystal case.

1) Thin crystal case

In this case, which is occurred when the length of the crystal is short the energy in the second harmonic pulse (E_{SHG}) can be represented as follows [79]

$$E_{SHG}\alpha\int_{-\infty}^{+\infty}\left|\int_{-\infty}^{+\infty}A_1(\omega/2+\omega')A_1(\omega/2-\omega')d\omega'\right|^2 d\omega=\int_{-\infty}^{+\infty}I_1^{\,2}(t)dt \qquad (20)$$

2) Thick crystal case

In this case which is occurred when the length of the crystal is long, the energy in the second harmonic pulse (E_{SHG}) can be evaluated as follows [79]

$$E_{SHG}\alpha\left|\int_{-\infty}^{+\infty}A_1(\omega')A_1(-\omega')d\omega'\right|^2 \qquad (21)$$

An ordinary photodiode sensitive to the wavelength equal to the half of fundamental's wavelength, gathers the second harmonic energy, evaluated in equations (20) and (21). The typical parameters, values are givien in Table III.

Table III Typical parameters which is used in reference [77]

n_{sp}	Spontaneous Emission Factor	1.1
T_r	Receiver Temperature	300°K
R_L	Load resistance	1000 Ω
T_c	Width of ultrashort pulse	400 *fsec*
η	Quantum Efficiency	0.9
N_0	Code length	250
M	Number of users	20
R	Bit Rate	1Gbps
G_{amp}	Gain of Amplifier	1000 (30dB)
L_1	Total path loss before amplification	8dB
L_2	Total path loss after amplification	5dB

V. APPLICATIONS OF OPTICAL CDMA IN DATA NETWORKS

Up until this section we have discussed on vast research activities and results on various OCDMA techniques and their corresponding performance in physical layer. However, employing OCDMA in data communication networks has gained a lot of momentum recently. Many researchers have demonstrated and studied on the performance and effectiveness of the OCDMA applications in local area and access networks which constitutes the second category [82]-[93]. In addition to fiber based local area and access networks, there has been some emerging research to devise and analyze and study the feasibility of employing OCDMA to setup wireless optical networks for indoor environments [94]-[103].

A. OCDMA-Based Fiber LAN and Access Networks

There are many research groups who have addressed the design, and have examined the network or data link layer issues, and have proposed novel protocols for fiber based networks [82]-[93]. Hsu and Li [82] have examined OCDMA techniques in a slotted packet network, with both time-hopping and frequency-hopping schemes. They have considered both centralized and distributed communication network and have derived system throughput and delay using forward error correction codes (FECs) assuming fixed sized packets and random time of arrival for the packets. They have concluded that the desired throughput can be achieved by proper selection of code length and/or number of frequency slots, which correspond to the processing gain of the system [82]. Performance analysis of an unslotted network is also presented by Hsu and Li [83] which is a more realistic and robust assumption in data communications because the number of interferers might change due to bursty nature of the received traffic at each node with no required timing coordination among the users. Performance evaluation of unslotted network is obtained using two approximation methods one for small packet length and the other for large packet length. With the performance of wavelength (frequency) hoping/time spreading optical networks at hand, Stok and Sargent tried to compare their performance to that of a wavelength division multiple access network in [84]. They showed that OCDMA systems have a higher utilization than WDMA in certain regimes of operation.

Channel coding may be used to improve the physical and data link performance, i.e., bit error rate and

[Downloaded from mail.ijop.ir on 2026-11-26]

throughput/delay [85]-[86]. Using Reed–Solomon or convolutional codes to improve physical performance is considered by Dale and Gagliardi [85] and Azmi, Nasiri-Kenari, Salehi [104]. Kim and Poor [86] have applied turbo codes to analyze and simulate the performance of a slotted OCDMA network employing binary pulse-position modulation (BPPM) in terms of packet throughput-delay. They concluded that turbo coding can be very useful in improving the packet throughput and in increasing the number of users of an OCDMA network for a given BER requirement. Moreover, the insertion of channel encoders/decoders into an OCDMA network have little cost impact on the overall network implementation [86].



Fig. 12 Fiber-To-The-Home (FTTH) architecture and services

In 2003, Shalaby began a series of articles on the performance and the protocols of the data link layer for an OCDMA packet network using OOCs [87]-[90]. First, he suggested two different protocols namely with and without pretransmission coordination [87]. Both protocols assume that all of the available codes are in a code pool and each user is assigned a code randomly when it decides to transmit data. However, in the first protocol the code is excluded from the pool once it is assigned for a data transmission, while in the latter the codes are never removed from the pool, which gives the network the ability to support more users and gain more throughput. A variation of the second protocol is proposed to eliminate the need for pre-transmission coordination in which the users are assigned a code once they become associated to the network. The article attempts to address steady state system throughput and average packet delay metrics for both protocols using correlator and chip-level receivers. In [87] it is concluded that the first protocol is suitable for the correlator receiver while the second protocol improves the average throughput and delay for a network with chip-level receiver. Suggesting the above medium access protocols, Shalaby analyzed the performance of a random access protocol, called *round-robin receiver transmitter (R^3T)* for the same networks [88] in order to answer some important questions that were not addressed in [87]. Proposing the R^3T protocol and its corresponding state diagram, he evaluated the effect of multi-packet messages, packet lost or error, propagation delay, and the tuning time on the performance of the data link layer using equilibrium point analysis. The results show the implementation plausibility of OOC based random access protocol having acceptable throughput, delay, and protocol efficiency in various situations [88]. Shalaby considered go-back *n* as the retransmission algorithm in [88]. However, it was shown in [89] that the link layer can attain better performance utilizing selective retransmission in the case of packet loss, but the protocol is more complicated and requires more buffer capacity in both receiver and transmitter. In the continuation of the above research in [90] an OCDMA MAC protocol is suggested that supports variable size window in the link layer to transmit variable length data employing error control codes. The authors have presented an accurate analysis of the proposed MAC protocol and concluded that the sliding window with variable size algorithm can enhance the system performance.

Optical access networks are considered the networks of choice in recent years [91], especially in the fiber-to-the-home (FTTH) applications, see Fig. 12, and OCDMA is fast becoming one of the main contenders for FTTH [92]-[93]. Kitayama *et al.* have suggested a novel approach in passive optical networks (PON) to bring gigabit transmission for both the uplink and downlink using OCDMA over WDM-PON [92]. Performance analysis of overlaid OCDMA channels on WDM grids to increase the system capacity is carried on in [92] in terms of bit error rate and power penalty. Furthermore, the experimental results in [92] have shown the feasibility of a gigabit OCDMA system. In [93] Kitayama *et al.* presented more discussions on OCDMA over WDM PON, and analyzed the system architecture and crosstalk in the presence of WDM channels. It was shown that OCDMA over WDM PON can provide simultaneously multigigabit/s up- and downlink to sufficient number of users while suppressing the WDM interchannel crosstalk by taking advantage of the reflection spectrum notches of superstructured fiber Bragg grating (SSFGB) en/decoder [93].

As it is clean from the above discussions, employing OCDMA in local area and access networks is fast becoming the technique of the choice for future optical networks. Therefore one can expect this trend will continue to grow by many research groups worldwide.

B. Wireless Optical CDMA

Wireless optical local area networks have been the subject of considerable research and implementation activities due to some of their unique features that distinguish them from traditional radio communication networks. Also it is believed that wireless optical LANs will acquire in importance where security is important or using radio frequency band would not be economical or safe due to electromagnetic effects [94]-[103]. Employing OCDMA techniques have been considered in the literature to implement a diffused channel based indoor access network [97]-[103]. Elmirghani and Cryan have considered the use of a hybrid PPM/OCDMA system [97] to be implemented in an indoor infrared network. Marsh and Kahn [98] have examined the properties and compared several multiple access strategies for downlink channel sharing infrared cellular network. They assumed a hexagonal cellular scheme and a reuse factor of three, where base stations are placed at the center of each cell. Their results show that optical FDMA and m-sequence CDMA reuse strategies are the worst and the system implementation is plausible using TDMA and OOC enabled CDMA techniques. In fact they have concluded that for the cell radii above 3m, CDMA using OOC sequences require approximately the same

[Downloaded from mail.ijop.ir on 2026-11-26]

SNR (i.e. transmission power) as TDMA with OOK and 2-PPM to achieve a worst case bit-error-rate.

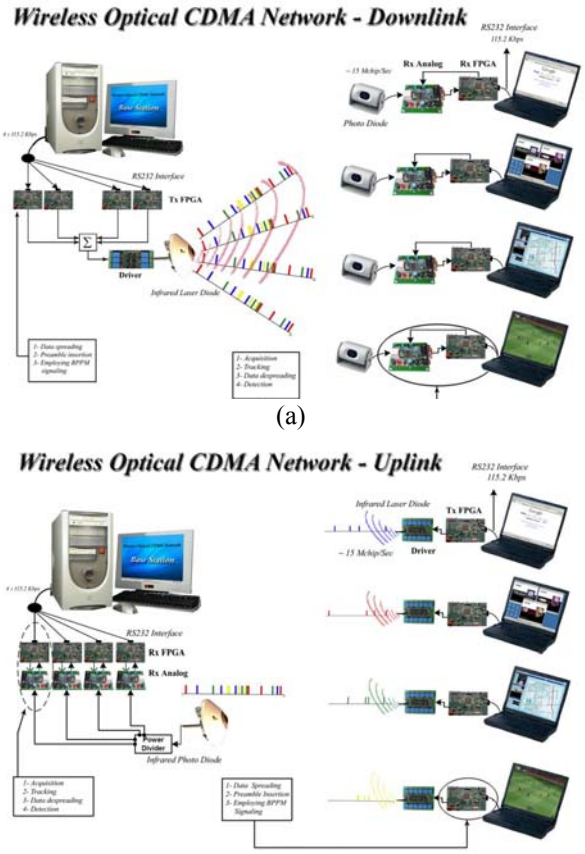

Fig. 13 Schematic of a typical wireless optical CDMA LAN (a) uplink and (b) downlink structure

Zahedi, Salehi, Nasiri-Kenari [99] have proposed a photon counting approach to analyze the performance of several modulation techniques using OOC as multiple-access algorithm in downlink channel of an indoor infrared CDMA network. The results show that the transmission can be performed well below ambient noise power with transmission power that satisfies eye-safety power regulations. They have also suggested an M-ary modulation method using OOC in the same system [100]. This modulation technique uses the cyclic shifts of OOCs to send more information when sending one signature code. [100]

Ghaffari, Matinfar, Salehi have studied the practical digital design concepts in the implementation of a typical CDMA based infrared network prototype [101], Fig. 13. They evaluate the performance of various types of receivers namely, correlator, hardlimiter + correlator and chip-level detector in a typical wireless OCDMA indoor local area network based on photon counting process. Considering the implementational criteria, digital structures were introduced. The results of their paper show that correlation + hard-limiter not only obtains the best performance among other receiver structures such as simple correlator and chip-level detection; it constitutes a simple implementational structure. However, chip-level detection performance approaches that of correlation + hard-limiter in high power region. For the synchronization circuit design the performance of two algorithms for OOC based OCDMA networks, namely, simple serial-search and multiple-shift are studied. Furthermore, they study a synchronization method based on match filtering and show that it presents a much better performance in the context of wireless OCDMA system and results in reducing the number of required training bits for the synchronization circuit operation. In this work digital tracking circuit was evaluated by considering the effect of sampling rate on its performance. The authors concluded that the results of various stages of the proposed wireless OCDMA LAN strongly indicate the viability and the importance of such networks in certain applications.

Just like radio CDMA networks, near-far problem has a considerable effect on a wireless OCDMA performance; therefore it is required to use power control for the uplink transmission in such networks as well. The analysis of power control and its effectiveness for the OOC infrared networks is derived by Aminzadeh-Gohari and Pakravan in [102] for various cases. While enabling power control algorithm is basically important in wireless infrared CDMA networks, it can be easily used for QoS provisioning in terms of reliability (i.e., BER) which is considered in [102]. The authors suggest an unfair power control algorithm which gives permission to high priority users to transmit at higher power level to achieve better error probability [103].

REFERENCES

[1] J. A. Salehi, "Emerging optical code-division multiple-access communications systems," IEEE Netw. Mag., Vol. 3, pp. 31–39, Mar. 1989

[2] J. Ratnam, "Optical CDMA in broadband communication-scope and applications," J. Op. Commun., Vol. 23, No. 1, pp. 11-21, 2002.

[3] B. Moslehi, J.W. Goodman, M. Tur, and H.J. Shaw, "Fiber-optic lattice signal processing," Proc. Of IEEE, Vol. 72, No. 7, pp. 909-930, July 1984.

[4] J. A. Salehi, "Code division multiple-access techniques in optical fiber networks-Part I: Fundamental principles," IEEE Transactions on Communications, Vol. 37, No. 8, pp. 824-833, August 1989.

[5] F. R. K. Chung, J.A. Salehi, and V.K. Wei, "Optical orthogonal codes: Design, analysis, and applications," IEEE Transactions on Information Theory, Vol. 35, No. 3, pp. 593-604, May 1989.

[6] J. A. Salehi and C.A. Brackett, "Code division multiple-access techniques in optical fiber networks-Part II: Systems performance analysis," IEEE Transactions on Communications, Vol. 37, No. 8, pp. 834-842, August 1989.

[7] H. Chung and P. Vijay Kumar, "Optical orthogonal codes-New bounds and an optimal construction, IEEE Transactions on Information Theory, Vol. 36, No. 4, pp. 866-873, July 1990.

[8] M. Azizoglo, J.A. Salehi, and Y. Li, "Optical CDMA via temporal codes," IEEE Transactions on Communications, Vol. 40, No. 7, pp. 1162-1170, July 1992.

[Downloaded from mail.ijop.ir on 2026-11-26]

[9] S. Mashhadi and J. A. Salehi, "Code division multiple-access techniques in optical fiber networks-Part III: Optical AND gate receiver structure with generalized optical orthogonal codes," IEEE Transactions on Communications, Vol. 45, No. 5, pp. 1457-1468, August 2006.

[10] S. M. Johnson, "A new upper bound for error-correcting codes," IRE Transactions on Information Theory, Vol. IT-8, pp. 203-207, 1962.

[11] G. C. Yang and T. E. Fuja, "Optical orthogonal codes with unequal auto- and cross-correlation constraints," IEEE Transactions on Information Theory, Vol. 41, No. 12, pp. 96-106, December 2001.

[12] G. C. Yang, "Some new families of optical orthogonal codes for code-division multiple-access fiber-optic networks," IEE Proceeding on Communications, Vol. 142, No. 6, December 1995.

[13] S. Bitan and T. Etzion, "Constructions for optimal constant weight cyclically permutable codes and difference families," IEEE Transactions on Information Theory, Vol. 41, No. 1, pp. 77-87, May 1995.

[14] R. Fuji-Hara and Y. Miao, "Optical orthogonal codes: Their bounds and new optimal constructions," IEEE Transactions on Information Theory, Vol. 46, No. 7, pp. 2396-2406, November 2000.

[15] C. S. Weng and J. Wu, "Optical orthogonal codes with nonideal cross-correlation," Journal of Lightwave Technology, Vol. 19, No. 12, pp. 1856-1863, December 2001.

[16] W. Chu, S. W. Golomb, "A new recursive construction for optical orthogonal codes," IEEE Transactions on Information Theory, Vol. 49, No. 11, pp. 3072-3076, November 2003.

[17] C. Ding and C. Xing, "Cyclotomic optical orthogonal codes of composite lengths," IEEE Transactions on Information Theory, Vol. 52, No. 2, pp. 263-268, February 2004.

[18] N. Miyamoto, H. Mizuno, and S. Shinohara, "Optical orthogonal codes obtained from conics on finite projective planes," Finite Fields and Their Applications 10 (2004) 405-411.

[19] W. Chu and C. J. Colbourn, "Optimal $(n,4,2)$-OOC of small orders," Discrete Mathematics 279 (2004) 163-172.

[20] H. Charmchi and J. A. Salehi, "Outer-product matrix representation of optical orthogonal codes," IEEE Transactions on Communications, Vol. 54, No. 6, pp. 983-989, June 2006

[21] H. M. Kwon, "Optical orthogonal code division multiple access system—Part I: With avalanche photodiode noise and thermal noise," IEEE Trans. Commun., Vol. 42, pp. 2470–2479, July 1994.

[22] T. Ohtsuki, K. Sato, I. Sasase, and S. Mori, "Direct-detection optical synchronous CDMA systems with double optical hard-limiters using modified prime sequence codes," IEEE J. Sel. Areas Commun., Vol. 14, No. 9, pp. 1879–1887, Dec. 1996.

[23] T. Ohtsuki, "Performance analysis of direct-detection optical asynchronous CDMA systems with double optical hard-limiters," J. of Lightw. Technol., Vol. 15, No. 3, pp. 452–457, Mar. 1997.

[24] H. M. H. Shalaby, "Chip level detection in optical code division multiple access," IEEE J. of LightwaveTechnol., , Vol. 16, pp. 1077–1087, Jun. 1998.

[25] L. B. Nelson and H. V. Poor, "Performance of multiuser detection for optical CDMA—Part I: Error probabilities," IEEE Trans. Commun., Vol. 43, pp. 2803–2811, Nov. 1995.

[26] L. B. Nelson and H. V. Poor, "Performance of multiuser detection for optical CDMA—Part II: Asymptotic analysis," IEEE Trans. Commun., Vol. 43, pp. 3015–3024, Dec. 1995.

[27] M. Azizoglu, J. A. Salehi, and Y. Li, "Optical CDMA via temporal codes," IEEE Trans. Commun., Vol. 40, pp. 1162–1170, July 1992.

[28] S. Zahedi and J. A. Salehi, "Analytical Comparison of Various Fiber–Optic CDMA Receiver Structures," IEEE J. Lightwave Technol., Vol. 18, No. 12, pp. 1718-1727, Dec. 2000.

[29] H. M. H. Shalaby, "Complexity, error probabilities, and capacities of optical OOK-CDMA communication systems," IEEE Trans. Commun., Vol. 50, No. 12, pp. 2009–2015, Dec. 2002.

[30] J. J. Chen and G. Yang, "CDMA fiber-optic systems with optical hard limiters," J. Lightw. Technol., Vol. 19, No. 7, pp. 950–958, Jul. 2001.

[31] S. Mashhadi and J. A. Salehi, "Code Division Multiple-Access Techniques in Optical Fiber Networks-Part III: Optical AND Logic Gate Receiver Structure with Generalized Optical Orthogonal Codes," IEEE Trans. Comm., Vol. 54, No. 8, pp. 1457- 1468Aug. 2006.

[32] R. Forouzan, J. A. Salehi, and M. Nasiri-Kenari, "Frame time-hopping fiber-optic code division multiple-access using generalized optical orthogonal codes," IEEE Trans. Commun., Vol. 50, No. 12, pp. 1971–1983, Dec. 2002.

[33] R. A. Scholtz, "Multiple access with time-hopping impulse modulation," in Proc. MILCOM'93, Oct. 1993, pp. 447–450.

[34] W. Lam and A. M. Hussain, "Performance analysis of direct detection optical CDMA communication systems with avalanche photodiodes," IEEE Trans. Commun., Vol. 40, pp. 810–820, Apr. 1992.

[35] M. Dale and R. M. Gagliardi, "Analysis of fiber-optic code-division multiple access," Univ. Southern Calif., CSI Tech. Rep. 92-06-10, June 1992.

[36] H. M. H. Shalaby, "Performance analysis of optical synchronous CDMA communication systems with PPM signaling," IEEE Trans. Commun., Vol. 43, pp. 624–634, Feb.–Apr. 1995.

[Downloaded from mail.ijop.ir on 2026-11-26]

[37] H. M. H. Shalaby, "Performance Analysis of Optical Overlapping PPM-CDMA Communication Systems," IEEE J. Lightwave Technol., Vol. 17, pp. 426-433, Mar. 1999

[38] H. M. H. Shalaby, "Direct Detection Optical Overlapping PPM-CDMA Communication Systems with Double Optical Hardlimiters," IEEE J. Lightwave Technol., Vol. 17, pp. 1158-1165, July 1999.

[39] G. Vannucci, "Combining frequency-division and code-division multiplexing in a high-capacity optical network," IEEE Netw. Mag., Vol. 3, pp. 21-30, Mar. 1989.

[40] L. Tancevski and I. Andonovic, "Wavelength hopping/time spreading code division multiple access systems," Electron. Lett., Vol. 30, No. 17, pp. 1388–1390, 1994.

[41] G. C. Yang and W. C. Kwong, "Performance comparison of multiwavelength CDMA and WDMA + CDMA for fiber-optic networks," IEEE Trans. Commun., Vol. 45, pp. 1426–1434, Nov. 1997.

[42] H. Fathallah, L. A. Rusch, and S. LaRochelle, "Passive optical fast frequency-hop CDMA communications system," J. Lightw. Technol., Vol. 17, No. 3, pp. 397–405, Mar. 1999.

[43] J. Mendez, R. M. Gagliardi, V. J. Hernandez, C. V. Bennett, and W. J. Lennon, "Design and performance analysis of wavelength/time (W/T) matrix codes for optical CDMA," J. Lightw. Technol., Vol. 21, No. 11, pp. 2524–2533, Nov. 2003.

[44] W. C. Kwong and G. C. Yang, "Extended carrier-hopping prime codes for wavelength–time optical code-division multiple access," IEEE Trans. Commun., Vol. 52, No. 7, pp. 1084–1091, Jul. 2004.

[45] T. W. F. Chang and E. H. Sargent, "Optimizing spectral efficiency in multiwavelength optical CDMA system," IEEE Trans. Commun., Vol. 51, No. 9, pp. 1442–1445, Sep. 2003.

[46] J. Mendez, R. M. Gagliardi, V. J. Hernandez, C. V. Bennett, and W. J. Lennon, "High-Performance Optical CDMA System Based on 2-D Optical Orthogonal Codes," J. Lightw. Technol., Vol. 22, No. 11, pp. 2409–2419, Nov. 2004.

[47] P. Saghari, R. Omrani, A. E. Willner and P. V. Kumar, "Analytical Interference Model for Two-Dimensional (Time–Wavelength) Asynchronous O-CDMA Systems Using Various Receiver Structures," J. Lightw. Technol., Vol. 23, No. 10, pp. 3260–3269, Oct. 2005.

[48] J. Mendez, C. A. Finnila, and R. M. Gagliardi, "Wavelength division multiplexing/code division multiple access hybrid," U.S. Patent 6 025 944, Feb. 15, 2000.

[49] R. N. Nogeira, P. S. Taluja, A. L. X. Teixera, P. S. B. Andre, J. F. Rocha, and J. L. Pinto, "New technique for implementing multiwavelength orthogonal codes for OCDMA using fiber Bragg gratings written in high birefringence fibers," in Proc. 16th Annu. Meeting IEEE Lasers Electro- Optics Society (LEOS'03), Vol. 2, Oct. 2003, Paper WI2, pp. 545–546.

[50] J. E. McGeehan, S. M. R. M. Nezam, P. Saghari, A. E. Willner, R. Omrani, and P.V. Kumar, "Experimental demonstration of OCDMA transmission using a three-dimensional (time-wavelength-polarization) codeset," J. of Lightwave Tech., Vol. 23, No. 10, pp. 3282 – 3289, Oct. 2005.

[51] J. A. Salehi , A. M. Weiner and J. P. Heritage "Coherent ultrashort light pulse code-division multiple access communication systems," J. Lightw. Technol., Vol. 8, pp. 478-491, Mar. 1990.

[52] M. Shirasaki, "Large angular dispersion by a virtually imaged phased array and its application to a wavelength demultiplexer," Opt. Lett., Vol. 21, pp. 366–368, 1996.

[53] S. Etemad, P. Toliver, R. Menendez, J. Young, T. Banwell, S. Galli, J. Jackel, P. Delfyett, C. Price, T. Turpin "Spectrally efficient optical CDMA using coherent phase-frequency coding" IEEE Photon Technol. Lett., Vol. 17, No. 4, Apr.2005.

[54] A. Grunet-Jepsen, A. E. Johnson, E. S. Maniloff, T. W. Mossberg, M. J. Munroe, and J. N. Sweetser, "Demonstration of all-fiber sparse lightwave CDMA based on temporal phase encoding," IEEE Photon. Technol. Lett., Vol. 11, pp. 1283–1285, Oct. 1999.

[55] H. Tsuda, H. Takenouchi, T. Ishii, K. Okamoto, T. Goh, K. Sato, A. Hirano, T. Kurokawa, and C. Amano, "Spectral encoding and decoding of10 Gbit/s femtosecond pulses using high resolution arrayed-waveguide grating," Electron. Lett., Vol. 35, pp. 1186–1187, July 8, 1999.

[56] C. Ji, R. G. Broeke, Y. Du, J. Cao, N. Chubun, P. Bjeletich, F. Olsson, S. Lourdudoss, R. Welty, C. Reinhardt, P.L. Stephan, and S. J. B. Yoo. "Monolithically integrated InP-based photonic chip development for O-CDMA systems." IEEE Journal of Selected Topics in Quantum Electronics, Vol. 11, No. 1, pp. 66-77, Jan.-Feb. 2005.

[57] J. Cao, R. G. Broeke, N. K. Fontaine, C. Ji, Y. Du, N. Chubun, K. Aihara, A.-V. Pham, F. Olsson, S. Lourdudoss, and S. J. Ben Yoo, "Demonstration of Spectral Phase O-CDMA Encoding and Decoding in Monolithically Integrated Arrayed-Waveguide-Grating-Based Encoder", IEEE Photon Technol. Lett., Vol. 18, No. 24, Dec. 2006, pp. 2602-2604.

[58] G. P. Agarwal, P. Toliver, R. Menendez, T. Banwell, J. Jackel, and S. Etemad, "Spectrally Efficient Six-User Coherent OCDMA System Using Reconfigurable Integrated Ring Resonator Circuits", IEEE Photon Technol. Lett., Volume 18, No. 18, Sept. 2006, pp.1952 – 1954.

[59] N. Wada and K. Kitayama, "A 10Gb/s optical code division multiplexing using 8-chip optical bipolar code and coherent detection," J. Lightwave Technol., Vol. 17, pp. 1758–1765, Oct. 1999.

[Downloaded from mail.ijop.ir on 2026-11-26]

[60] P. C. Teh, P. Petropoulos, M. Ibsen, and D. J. Richardson, "A comparative study of the performance of seven and 63-chip optical code-division multiple-access encoders and decoders based on superstructured fiber Bragg gratings," J. Lightwave Technol., Vol. 19, No. 9, pp. 1352-1365, 2001.

[61] T. Hamanaka, X. Wang, N. Wada, A. Nishiki, K. –chi. Kitayama, "Ten-User Truly Asynchronous Gigabit OCDMA Transmission Experiment with a 511-chip SSFBG En/Decoder," IEEE J. Lightwave Technol., Vol. 24, No. 1, pp. 95-102, 2006.

[62] N. Wada, H. Sotobayashi, and K. Kitayama, "Error-free 100 km transmission of 10 Gb/s optical code division multiplexing using BPSK picoseconds-pulse code sequence with novel time-gating detection," IEE Electron. Lett., Vol. 35, No. 7, pp. 833–834, Apr. 1999.

[63] R. P. Scot, W. Cong, V. J. Hernandez, K. Lei, B. H. Kolner, J. P. Heritage, and S. J. Ben Yoo, "An Eight User Time-Slotted SPECTS O-CDMA Testbed: Demonstration and Simulations," IEEE J. Lightwave Technol., Vol. 23, No. 10, pp. 3232-3240, 2005.

[64] G. P. Agrawal, Nonlinear Fiber Optics. New York: Academic Press, 2001.

[65] H. P. Sardesai, C.–C. Chang, and A. M. Weiner, "A Femtosecond Code-Division Multiple-Access communication System," IEEE J. Lightwave Technol. Vol. 16, No. 11, pp. 1953-1964, 1998.

[66] R. P. Scott, W. Cong, K. Li, V. J. Hernandez, B. H. Kolner, J. P. Heritage, and S. J. Ben Yoo, "Demonstration of an Error-Free 4 ×10 Gb/s Multiuser SPECTS O-CDMA Network Testbed," IEEE Photonics Technol. Lett., Vol. 16, No. 9, pp. 2186-2188, 2004.

[67] J. H. Lee, P. C. Teh, Z. Yusoff, M. Ibsen, W. Belardi, T. M. Monro, and D. J. Richardson, "A holey fiber-based nonlinear thresholding device for optical CDMA receiver performance enhancement," IEEE Photonics Technol. Lett., Vol. 14, No. 6, pp. 876-878, 2002.

[68] X. Wang, T. Hamanaka, N. Wada, and K.-I. Kitayama, "Dispersion-flattened-fiber based optical thresholder for multiple-access-interference suppression in OCDMA system," J. Opt. Soc. Amer, Vol. 13, No. 14, pp. 5499–5505, 2005.

[69] J. H. Lee, P. C. Teh, P. Petropoulos, M. Ibsen, and D. J. Richardson, "A grating-based OCDMA coding-decoding system incorporating a nonlinear optical loop mirror for improved code recognition and noise reduction," IEEE J. Lightwave Technol. Vol. 20, No. 1, pp. 36-46, 2002.

[70] B. Ni and J. S. Lehnert, "Performance of a Nonlinear Receiver for the Ultrashort-Pulse Optical CDMA System," SPIE, Bellingham, WA, 2005.

[71] Y. Igarashi and H. Yashima, "Performance Analysis of Coherent Ultrashort Light Pulse CDMA Communication Systems with Nonlinear Optical Thresholder," IEICE Trans. Communication., Vol. E89–B, No. 4, 2006.

[72] H. Folliot, M. Lynch, A. L. Bradley, T. Krug, L. A. Dunbar, J. Hegarty, J. F. Dunegan, and L. P. Barry, "Two-photon-induced photoconductivity enhancement in semiconductor microcavities: A theoretical investigation," J. Opt. Soc. Amer. B, Opt. Phys., Vol. 19, No. 10, pp. 2396–2402, 2002.

[73] F. R. Laughton, J. H. Marsh, D. A. Barrow, and E. L. Portnoi, "The two-photon absorption semiconductor waveguide autocorrelator," IEEE J. Quantum Electron., Vol. 30, No. 3, pp. 838–845, 1994.

[74] Z. Zheng, A. M. Weiner, J. H. Marsh, and M. M. Karkhanehchi, "Ultrafast optical thresholding based on two-photon absorption GaAs waveguide photodetectors," IEEE Photon. Technol. Lett., Vol. 9, No. 4, April 1997.

[75] Z. Zheng, S. Shen, H. Sardesai, C.-C. Chang, J. H. Marsh, M. M. Karkhanehchi, and A. M. Weiner, "Ultrafast two-photon absorption optical thresholding of spectrally coded pulses," Elsevier, Optics Communication, No. 167, pp. 225–233, 1999.

[76] K. Jamshidi and J. A. Salehi, "Statistical Characterization and Bit-Error Rate Analysis of Lightwave Systems With Optical Amplification Using Two-Photon- Absorption Receiver Structures," IEEE J. Lightwave Technol, Vol. 24, No. 3, 2006.

[77] K. Jamshidi and J. A. Salehi, "Performance Analysis of spectral-phase-encoded optical CDMA system using two-photon-absorption receiver structure for asynchronous and slot-level synchronous transmitters," to be published in IEEE J. Lightwave. Technol.

[78] W. H. Glenn, "Second Harmonic Generation by Picosecond Optical pulses," IEEE J. Quantum Electron, Vol. QE-5, No. 6, 1969.

[79] Z. Zheng and A. M. Weiner, "Coherent control of second harmonic generation using spectrally phase coded femtosecond waveforms," Elsevier, Chemical Physics, Vol. 267, pp. 161-171, 2001.

[80] Z. Zeheng, A. M. Weiner, K. R. Parameswaran, M. H. Chou, and M. M. Fejer, "Low Power Spectral Phase Correlator Using Periodically Poled $LiNbO_3$ Waveguides," IEEE Photon. Technol. Lett., Vol. 13, No. 4, April. 2001.

[81] Z. Jiang, D. S. Seo, S. –D. Yang, D. E. Leaird, R. V. Roussev, C. Langrock, M. M. Fejer, A. M. Weiner, "Four-User, 2.5-Gb/s, Spectrally Coded OCDMA System Demonstration Using Low-Power Nonlinear Processing," IEEE J. Lightwave Technol, Vol. 23, No. 1, 2005.

[82] C. S. Hsu and V. O. K. Li, "Performance analysis of slotted fiber-optic code-division multiple-access (CDMA) packet networks," IEEE Trans. Commun., Vol. 45, pp. 819–828, July 1997.

[83] J. A. Salehi "Performance analysis of unslotted fiber-optic code-division multiple-access (CDMA) packet

[Downloaded from mail.ijop.ir on 2026-11-26]

networks," IEEE Trans. Commun., Vol. 45, pp. 978–987, Aug. 1997.

[84] Stock and E. H. Sargent, "System performance comparison of optical CDMA and WDMA in a broadcast local area network," IEEE Commun. Let., Vol. 6, pp 409-411, Sep. 2002.

[85] M. R. Dale and R. M. Gagliardi, "Channel coding for asynchronous fiberoptic CDMA communications," IEEE Trans. Commun., Vol. 43, pp. 2485–2492, Sept. 1995.

[86] J. Y. Kim and H. V. Poor, "Turbo-coded packet transmission for an optical CDMA network," J. Lightwave Technol., Vol. LT-18, pp. 1905–1916, Dec. 2000.

[87] H. M. H. Shalaby, "Optical CDMA random access protocols with and without pretransmission coordination," J. Lightwave Technol., Vol. 21, pp. 2455-2462, Nov. 2003.

[88] H. M. H. Shalaby, "Performance analysis of an optical CDNA random access protocol," J. Lightwave Technol., Vol. 22, pp. 1233-1241, May. 2004.

[89] M. A. A. Mohamed, H. M. H. Shalaby, and E. A. Badawy, "Optical CDMA protocol with selective retransmission," Proc. of 9th IEEE ISCC, Vol. 2, pp. 621-626, Jun. 2004.

[90] M. A. A. Mohamed, H. M. H. Shalaby, and E. A. Badawy, "Performance analysis of an optical CDMA MAC protocol with variable-size sliding window," J. Lightwave Technol., Vol. 24, pp. 3590-2462, Nov. 2003.

[91] T. Koonen, "Fiber to the home/fiber to the premises: what, where, and when?," Proceedings of the IEEE, Vol. 94, pp. 911-934, May 2006.

[92] K. Kitayama, X. Wang, and H. Sotobayashi, "Gigabit-Symmetric FTTH – OCDMA over WDM PON," Proc. of Cong. on Optical Network Design and Modeling, pp. 273-281, Feb. 2005.

[93] K. Kitayama, X Wang, and N. Wada, "OCDMA over WDM PON – Solution path gigabit-symmetric FTTH," J. Lightwave Technol., Vol. 24, pp. 1654-1662, Apr. 2006.

[94] F. R. Gfeller and U. H. Bapst, "Wireless In-house Data Communication via Diffuse Infrared Radiation," Proc. of IEEE, Vol. 67, pp. 1474-1486, Nov. 1979.

[95] J. M. Kahn and J. R. Barry, "Wireless Infrared Communications," Proceedings of IEEE, Vol. 85, No. 2, pp. 265-298, Feb. 1997.

[96] M. R. Pakravan and M. Kavehrad, "Design Considerations for Broadband Indoor Infrared Wireless Communication Systems," Int. J. of Wireless Information Networks, Vol. 2, No. 4, pp. 223-238, Oct. 1995.

[97] J. M. H. Elmirghani and R. A. Cryan, "Indoor Infrared LAN's with Multiple Access Facilities Based on Hybrid PPM CDMA," in Proceedings of IEEE ICC'95, Vol. 2, pp. 731-734, June 1995.

[98] G. W. Marsh and J. M. Kahn, "Channel Reuse Strategies for Indoor Infrared Wireless Communications," IEEE Trans. on Commun., Vol. 45, No. 10, pp. 1280-1290, Oct. 1997.

[99] S. Zahedi, J. A. Salehi, and M. Nasiri-Kenari, "A Photon Counting Approach to the Performance Analysis of Indoors Wireless Infrared CDMA Networks," Proceedings of IEEE PIMRC'00, Vol. 2, pp. 928-932, London, UK, Sep. 2000.

[100] S. Zahedi, J. A. Salehi, and M. Nasiri-Kenari, "M-ary Infrared CDMA for Indoors Wireless Communications," Proceedings of IEEE PIMRC'01, Vol. 2, pp. 6-10, San Diego, CA, USA, Sep. 2001.

[101] B. M. Ghaffari, M. D. Matinfar and J. A. Salehi, "Wireless optical CDMA LAN part I: digital design concepts," to be appear on IEEE Trans. on Commun.

[102] A. Aminzadeh-Gohari and M. R. Pakravan, "Analysis of Power Control for Indoor Wireless Infrared CDMA Communication," Proc. of IEEE 25th IPCCC, pp. 297-302, Phoenix, AR., USA, Apr. 2006.

[103] A. Aminzadeh-Gohari and M .R. Pakravan, "Power control to enable QoS for indoor wireless infrared CDMA networks," Proc. of IEEE ICCE, Vol. 1, pp. 246-252, Hanoi, Vietnam, Oct. 2006.

[104] P. Azmi, M. Nasiri-Kenari, and J. A. Salehi, "Low-rate super-orthogonal channel coding for fiber-optic CDMA communication systems," J. Lightw. Technol., Vol. 19, No. 6, pp.847-857, June 2001.

[Downloaded from mail.ijop.ir on 2026-11-26]