Micro-channels over the glass surface made by interaction of Ar^+ laser beam and Ag^+/Na^+ ion-exchanged glasses

J. Mostafavi-Amjad, H. R. M. Khalesifard
Institute for Advanced Studies in Basic Sciences, Zanjan, Iran.

Abstract— **Micro-channels are made over the Ag^+/Na^+ ion-exchanged soda-lime glass surface by interaction of an intense Ar^+ laser beam and the silver ions inside the glass matrix. The Ar^+ laser beam reduces the Ag^+ ions inside the matrix. The Ag^+ atoms aggregate into silver nano-clusters around the interaction area, inside the glass matrix. Aggregation of the silver atoms and the thermal effects of the interaction, changes the geometrical profile of the glass surface. This phenomenon has been used to produce micro-sized channels over the glass surface. During the interaction the glass has moved under the focused laser beam in two dimensions by resolution of 300 nm via a computer controlled xyz sub-micro-positioner to produce the channel walls. Using this technique, micro-channels of 0.3 μm deep and arbitrary width have been made. The height of the produced wall has been determined by interferometry techniques.**

KEWORDS: Microfluid, Microchannel, Microstructure, Lithography, Nanostructure, Silver Cluster.

I. INTRODUCTION

Micro-channels have been used in many areas such as; cooling of electronic devices [1], experimental –theoretical studies of fluid flow inside channels [1], micro-sized channel reactions, inside micro-reactors [3], diffusion effects of DNA inside channels [4], investigation of bacteria motion inside channels [5]. Different techniques have been used to construct such channels [1], [2].

Silver ion-exchanged glasses are attractive materials for their applications in integrated-optics devices, wave guides and optical-switching [6]-[8]. In our previous works, [9], [10] we have shown that the intense Ar^+ laser beam interacts with Ag^+/Na^+ ion-exchanged glasses, reduces the silver ions and modifies the geometric profile of the glass surface following the aggregation of the silver atoms around the interaction area. Here we are reporting how this phenomenon can be used to make micro-channels over the glass surface.

In this article, after an introduction, we will discuss how an intense Ar^+ laser beam interacts with the silver ions embedded in a glass matrix. We will explain how the mentioned interaction can be used to make the micro-channels and finally we will discuss about the obtained results.

II. INTERACTION OF Ar^+ LASER BEAM AND Ag^+/Na^+ ION-EXCHANGED GLASSES

The intense Ar^+ laser beam cause that the electrons form non-bonding oxygen atoms in the glass matrix reduce the silver ions. 3-4 eV of energy is enough to reduce silver ions. This can be provided by interaction of the Ar^+ laser beam and electrons of non-bonding oxygen atoms in the glass matrix [10].

The free silver atoms aggregated into nano-silver clusters inside the glass matrix [7]. The clusters usually have spherical shapes with 10-20 nm in diameters [10]. The existence of silver clusters inside the glass matrix changes the absorption coefficient of the glass and in result the glass absorbs the visible photons [6].

By absorbing the Ar^+ laser light (λ=514 nm), the temperature of interaction area and consequently the mobility of the silver clusters increases and they immigrate to the regions of lower viscosity while the radiation pressure of the laser beam also push them out of the laser

[Downloaded from mail.ijop.ir on 2026-11-26]

beam focus point over the glass surface. These two processes cause that the silver clusters aggregate more around the interaction area [10]. Immigration of silver clusters to these areas also modifies the geometrical profile of the glass surface. This modification depends on the value of the thermal energy that has been relaxed in the interaction region by absorption of the laser beam power. i.e. the higher laser beam power the higher changes on the glass surface geometrical profile. From now on we are calling this interaction as Non-Homogeneous Surface Induction (NHSI). It should be mentioned that for powers more than some critical limit, some sort of the laser beam ablation occurs over the glass surface that we are not interested in this work. For the moment we have been able to make walls of 300 nm height over the glass surface when a laser beam of 120 mW at 514 nm had been used.

III. EXPERIMENTS

A. *The samples*

Soda-lime glass was chosen as the dielectric medium for embedding the silver ions. The composition of the glass used in present experiment was: 80% SiO_2, 9.41% CaO, 4% Na_2O, 3.3% MgO, 2.2% Al_2O_3, 0.41% K_2O, 0.2% S, 0.11% Fe_2O_3, 0.11% P_2O_5, 0.26% of weight percent. The glass slabs (dimensions: 40.0×25.6×0.8 mm) merged into the molten salt of $AgNO_3/NaNO_3$ (1/4 weight ratio) for 4 hrs at 400 °C.

The Ag^+/Na^+ ion-exchange occurs between the glass and the molten salt just due to ionic concentration difference. Silver ions diffuse under the glass surface up to the depth of 30-70 μm that can be measured by interferometry techniques [11]-[12].

B. *Eexperimental setup*

To make micro-channels we have used light scanning method over the ion-exchanged glass surface.

The NHSI is made along the scanned lines and after passing laser light, the glass surface get cooled and have stable profile [9].

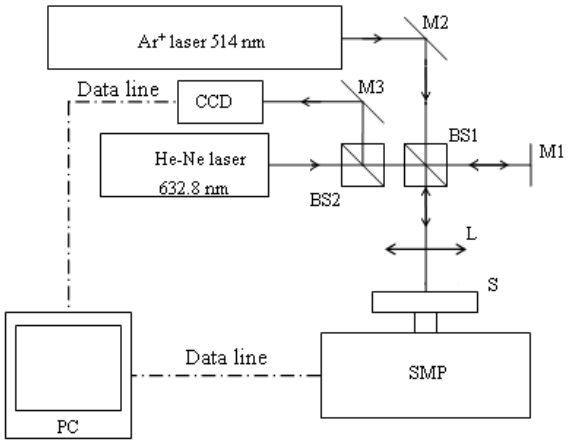

Fig. 1 Experiment setup: pump Ar+ laser, probe He-Ne laser, BS-beam splitter , M-mirror, L-Lens, S-sample, SMP-submicropositioner.

Figure 1 shows the experiment setup. The Ar^+ laser beam focused by lens L on the sample S. S can be moved by means of the sub-micro-positioner, SMP. SMP is a motorized and computer controlled xyz-positioner that moves S in a plane perpendicular to the Ar^+ laser beam in steps of 50 nm and velocity range of 0.3-50.0 μm/s. The SMP is controlled through a code that has been written in Visual Basic (VB). This means that the shape of scanned line and its profile is also computer controlled. The laser-beam power at the focused point over the glass surface and scanning velocity in the experiments were 10^7 W/cm^2 and 1.0 μm /sec respectively.

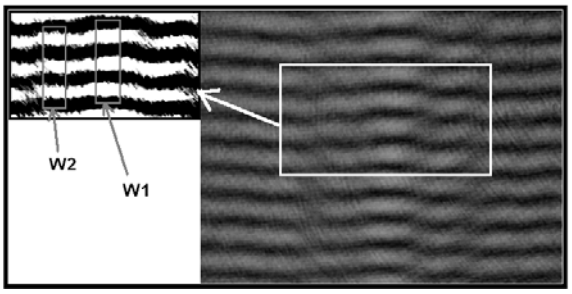

Fig. 2 Interference fringes of the micro-wall, W1 deflection area, W2 base area (glass surface). Left side is interference fringes after noise reduction.

A Michelson interferometer has been used for monitoring the interaction process and in situ measurement of the wall height. In this interferometer, a 10 mW He-Ne laser used as a coherent light source and a CCD was recoding the interference Fringes in gray scale.

[Downloaded from mail.ijop.ir on 2026-11-26]

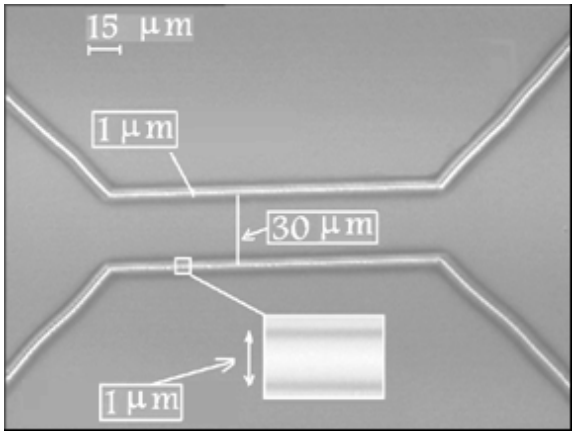

Fig. 3 Two walls with 30µm distance and 1µm width.

Figure 2 is an example of the recorded interference pattern over one of the walls of the micro-channel. It is clear that the existence of the wall has deflected the pattern about one inter-fringe distance i.e. the wall height is about $\lambda/2 = 317$ nm ($\lambda = 633$ nm).

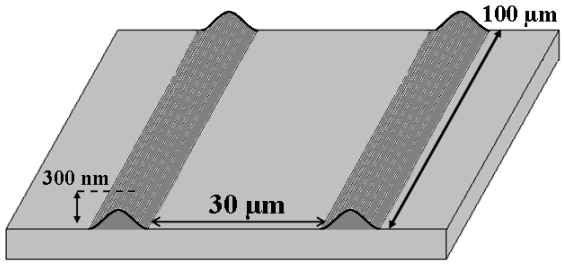

Fig. 4 Schematically three dimensional profile of micro-channels.

An optical micrograph of the channel has been shown in Fig. 3. As it shown in this figure, the wall thickness is about 1 µm. Changes over the brightens of the picture around the wall are indication of the non-homogeneous distribution of silver clusters of different size around the interaction area [9] or in other words the NHSI. By analyzing the interference fringes, the three dimensional profile of micro-walls are determined (Fig. 4).

C. Control scheme and calibration of the setup

To move the sample under the focused laser beam, we have used the motorized SMP (Luminos Industries LTD, Model I3005: P 3A-A-A-A-H). This SMP is a xyz-positioner that has the resolution of 50 nm in x and y directions. The factory software was not supporting the stage to move in the xy-plane according to some function *f(x,y)* in demand that is needed to design a micro channel. So, we have developed a code in Visual Basic (VB) to control the stage. But since the hardware of the SMP have not been able to command the three motor drives at the same time, the code has written in a way to switch periodically to x- and y-motor drive in steps of 50 nm in each direction and lowest switching time of 1ms. This means that the maximum scan rate of the stage in each direction is 50 µm/s. As an example, Fig. 5 shows that scanning the line $y=x$ creates a ramp with step width and height of 50 nm. Since we have been looking to thermal effect of the laser beam over the glass surface, such a ramp creates a smooth line of interaction.

Figure 6 shows some other composition of different lines that are created by this software.

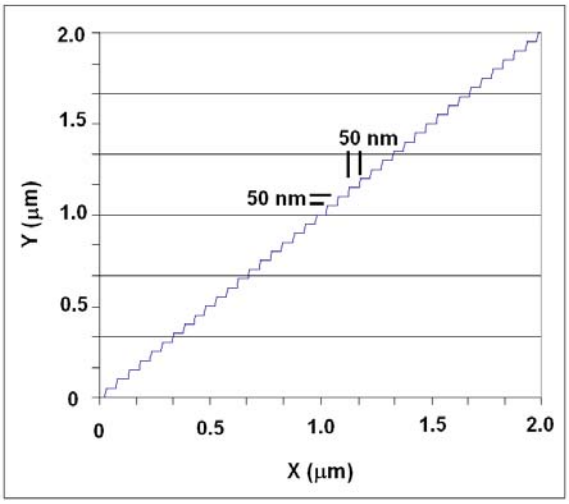

Fig. 5 Linear response of SMP. X and Y are step of motion at micro meter (µm) scales.

[Downloaded from mail.ijop.ir on 2026-11-26]

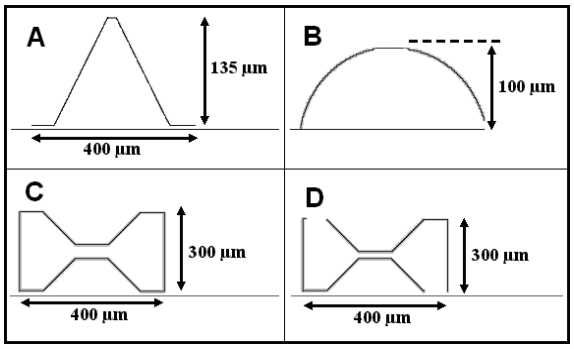

Fig. 6 The response of SMP for linear (A), circle (B) and arbitrary functions (C,D).

The size of micro-channel depends on the scanning velocity, laser power and sample type.

The central part of the Fig. 3, where the walls are parallel, forms the micro channel with 100 µm length, 30 µm widths and 300 nm heights. The cone shape area of channel used for injection of a fluid inside the channel.

IV. DISCUSSION AND CONCLUSION

Ar^+ laser beam interacts with Ag^+/Na^+ ion-exchanged glasses and reduces the Ag^+ ions in the glass matrix. Aggregation of silver atoms to silver clusters around the interaction region modifies the geometrical profile of the glass surface. Scanning the sample under the focused laser beam creates a wall along the scanned line. Such walls can be used to make chambers or channels that can be used in micro-fluidity research works.

When we have applied an Ar^+ laser beam of 10^7 W/cm^2 at 514 nm and scanning velocity of 1.0 µm/s over the samples that are prepped as section III.A, we have been able to make channels of 1.0 to 100.0 µm wide and 0.30 µm deep. The height of walls depends on concentration of silver ions, power of the laser beam and speed of laser beam scan over the glass surface.

REFERENCES

[1] Y.-T. Chen, S.-W. Kang, W.-C. Tuh, and T.-H. Hsiao, "Experimental Investigation of Fluid Flow and Heat Transfer in Microchannels," Tamkang J. Science and Eng. Vol. 7, pp. 11-16, 2004.

[2] J. S. Yahng, S. C. Jeoung, D. S. Choi, D. Cho B. H. Chon, J. H. Kim, et al., "Fabrication of Microfluidic Devices by Using a Femtosecond Laser Micromachining Technique and µ-PIV Studies on Its Fluid Dynamics," J. Korean Phys. Soc. Vol. 47, pp. 977-981, 2005.

[3] Y.S.S. Wan, A. Gavriilidis, and K.L. Yeung "Pentene Epoxidation in Titanium Silicalite-1 Microchannel Reactor: Experiments and Modeling," Chem. Eng. Research Design, Vol. 81, pp. 753-759, 2003.

[4] C. A. P. Petit and D. C. Jeffrey, "Combing of Molecules in Microchannels (COMMIC): A Method for Micropatterning and Orienting Stretched Molecules of DNA on a Surface," Nano Lett. Vol. 3, No. 8, pp. 1141-1146, 2003.

[5] M.-J. Kim and K. S. Breuer, "Characteristics of Bacterial Pumps in Microfluidic Systems," NSTI-Nanotech, Vol. 1, pp. 712-715, 2005.

[6] U. Kreibing and M. Vollmer, *Optical Properties of Metal Clusters*, Springer New, York, 1995.

[7] F. Gonella, G. Mattei, P. Mazzoldi, E. Cattaruzza, G. W. Arnold, G. Battaglin, P. Calvelli, R. Polloni, R. Bartoncello, and R. F. Haglund, "Interaction of High-Power Laser Light with Silver Nanocluster Composite Glasses," Appl. Phys. Lett. Vol. 69, pp. 3101-3103, 1996.

[8] D. P. Peters, C. Strohhofer, M. L. Brongersma, J. van der Elsken, and A. Polman., "Formation Mechanism of Silver Nanocrystals Made by Ion Irradiation of Na^+/Ag^+ Ion-Exchanged Soda-Lime Silicate Glass," Nucl. Instrum. Methods Phys. B, Vo. 168, pp. 237-244, 2000.

[9] A. Nahal, J. Mostafavi-Amjad, A. Ghods, M. R. H. Khajehpour, S. N. S. Reihani, and M. R. Kolahchi, "Laser-Induced Dendritic Microstructures on the Surface of Ag^+-Doped Glass," J. Appl. Phys. Vol. 100, pp. 053503-053503-6, 2006.

[Downloaded from mail.ijop.ir on 2026-11-26]

[10] A. Nahal, H. R. M. Khalesifard, and J. Mostafavi-Amjad, "Photothermal-Induced Dichroism and Microcluster Formation in Ag^{+}-Doped Glasses," Appl. Phys. B, Vol. 79, pp. 513-518, 2004.

[11] K. Yabana and G. F. Bertsch , "Optical Response of Small Silver Clusters," Phys. Rev. A, Vol. 60, pp. 3809-3814, 1999.

[12] S. I. Najafi, *Introduction to Glass Integrated Optics*, Artech House, 1992.

[Downloaded from mail.ijop.ir on 2026-11-26]

[Downloaded from mail.ijop.ir on 2026-11-26]